SeaBat 8101

Multibeam Echosounder System

OPERATOR'S MANUAL

Version 3.02

Drawing Number 11275
Part Number 86010009

This page intentionally left blank

Notice

The information contained in this document is subject to change without notice. RESON makes no warranty of any kind with regard to this material, including (but not limited to) the implied warranties of merchant liability and fitness for a particular purpose. RESON shall not be liable for errors contained herein or for incidental or consequential damages in connection with the furnishing, performance, or use of this material.

Copyright Statement

SeaBat 8101 Operator's Manual written by Reson Inc.
100 Lopez Road, Goleta, California 93117, USA.
Telephone (805) 964-6260, Facsimile (805) 964-7537

Website: www.reson.com
E-mail: sales@reson.com
support@reson.com

Copyright Release

Printing History

August 2002 - Version 3.02 - Printed in U.S.A.

Version 3.02 – Incorporated errata, updated text throughout, updated Chapter 6 to ISD Rev. 1.23 and updated drawings in Chapter 9.

Version 3.01 – Incorporated errata, Updated Table 5 (monitor specifications), updated Option 033 text, and updated drawings in Chapter 9.

Version 3.00 – Major structural changes throughout manual: Incorporated errata, converted appendices to chapters to allow better text tracking in the Table of Contents, updated text, updated new Chapter 6 to ISD Rev. 1.22, added new Chapter 8, and updated drawings in new Chapter 9.

Version 2.30 – Incorporated errata, updated text to include Ping Hold-off Feature and Snippets Mode, updated Appendix B to ISD Rev. 1.21, and updated drawings in Appendix E. Also, in Appendix E, removed mounting pole drawings because they are now available in a separate handbook.

Version 2.20 – Updated text, corrected typographical errors, updated Appendix B to ISD Rev. 1.20, and updated drawings in Appendix E.

Version 2.10 - Revisions to Ping Rate text and tables, changes to range scales, updated Appendix B to ISD Rev. 1.18, and updated drawings in Appendix E.

Version 2.05 - Updated via errata - changes to range scales, added new text in Chapter 3, and corrections to ISD text.

Version 2.04 - Revisions to correct typographical errors and add new text. Updated Appendix B to ISD Rev. 1.15.

Version 2.03 - Updated UDP Port number text.

Version 2.02 - Updated Appendix B to ISD Rev. 1.12.

Version 2.01 - Minor revisions to correct errors in text and figures in initial release.

Version 2.00 - Initial release

RESON strives to maintain up-to-date information and may, as necessary, review and revise this document. If the information contained herein is unclear, please contact your nearest RESON office for clarification.

Preface

This RESON SeaBat 8101 Operator's Manual, 2.00 and 3.00 series, has been developed from an earlier version of the manual for the same equipment. The format has been changed slightly to accommodate documentation requirements and changes to the system's operating software.

The installation procedures in this document are written for personnel who may be novice sonar operators, but are familiar with basic electronics and wiring and maintenance of

electronic systems. Procedures are described in a step-by-step sequence. We recommend that the reader proceed from chapter to chapter until the material is familiar.

Manual Overview

This manual is organized as follows:

Chapter 1, General Information - provides an introduction and component information for the SeaBat 8101 system.

Chapter 2, Installation - provides both general and specific installation guidelines plus an initial system checkout procedure.

Chapter 3, System Operation - describes system operating procedures.

Chapter 4, Options and Upgrades - provides descriptions of the various options and upgrades available for the SeaBat 8101 system.

Chapter 5, Glossary of Terms - provides a list and description of the technical terms used in this manual.

Chapter 6, Interface Specification Document - describes the interface design specifications.

Chapter 7, Internal Interfaces - describes the internal interface communication specifications.

Chapter 8, Supplemental Text - provides the operator with supplemental operating information without interrupting the normal flow of text in Chapter 3.

Chapter 9, Support Documentation - provides supplemental engineering drawings for use by installers and/or maintenance personnel.

Electronic File Version

This document is available from RESON in the Adobe Acrobat Portable Document Format (PDF). The selected PDF process preserves the interactive index and cross-reference features of the original Microsoft Word document.

This page intentionally left blank.

Table of Contents

List of Figures

List of Tables

This page intentionally left blank.

Chapter 1 - General Information

1.1 Introduction

This manual describes the SeaBat 8101 Multibeam Echosounder System. It is written for both the first-time user as well as the experienced operator who wishes to use a particular section as a reference guide. This manual provides details on basic installation, operation, and maintenance of the system. Figure 1 shows the basic components of the SeaBat 8101 system.

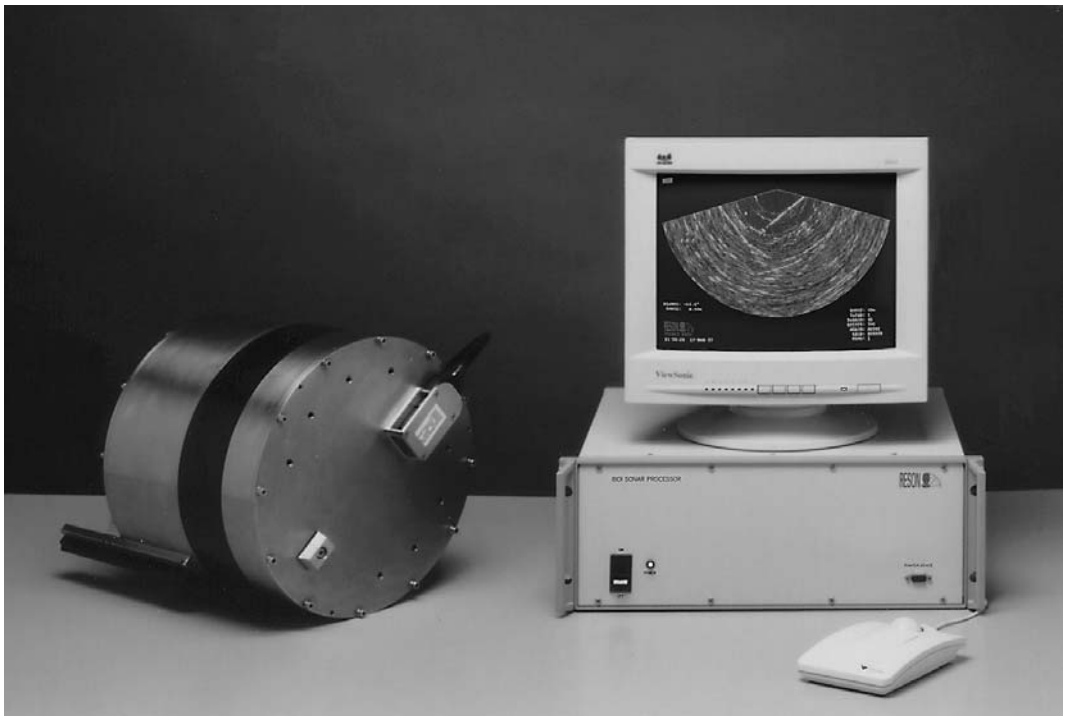

Figure 1, SeaBat 8101 System

1.1.1 What Is a SeaBat 8101?

The SeaBat 8101 is a 240 kHz Multibeam Echosounder (MBES) System, which measures the relative water depths across a wide swath perpendicular to a vessel's track.

The design of the 8101 is a result of years of experience gained from RESON's successful SeaBat series of MBES systems and is intended to be quickly and smoothly integrated into existing hydrographic systems, using interface architecture common to the entire SeaBat 81xx series.

The five standard components of the 8101 system are:

- Sonar Processor (topside or dry end)
- Sonar Processor to Sonar Head Signal and Control cable.
- Sonar Head (wet end)
- Color (S-VGA) Monitor
- Trackball

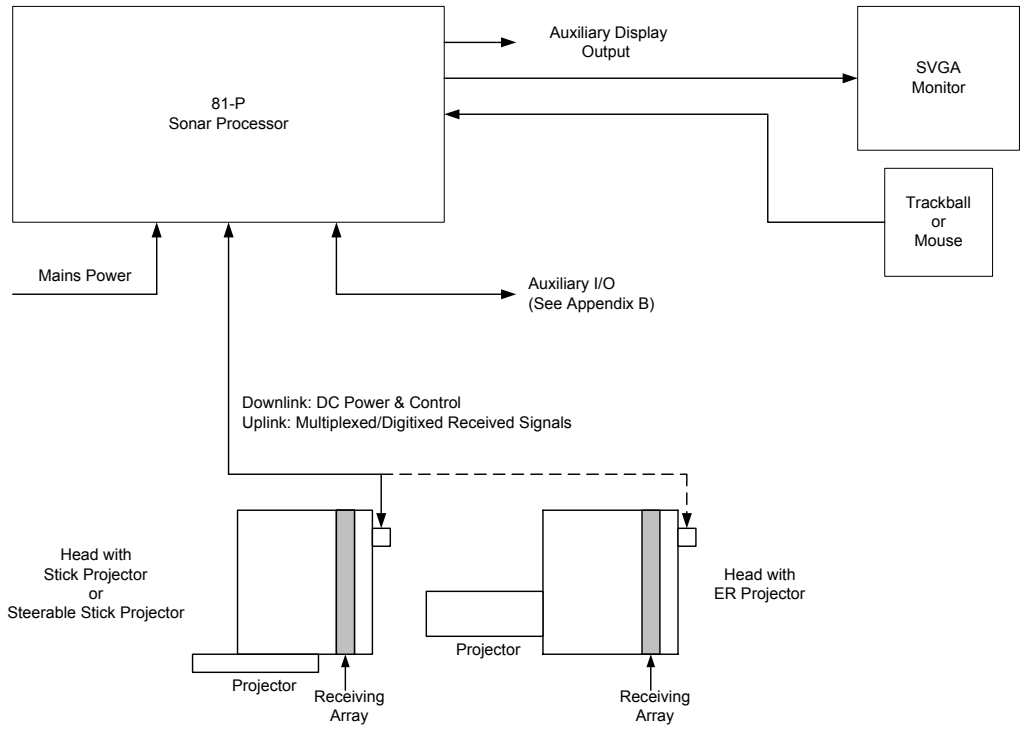

Figure 2, SeaBat 8101 System Block Diagram

- The Sonar Processor can be rack mounted in the operating space. There is no requirement for the operator to handle the processor other than to connect the Trackball to its front, or rear, panel and operate the system Power On/Off switch. The Sonar Processor is the source of operating power for the Sonar Head and all system I/O connections are made at the processor's rear panel.

- The Sonar Processor to Sonar Head Signal and Control cable is a multi-conductor cable of water-blocked construction with a molded waterproof pressure immune connector at the wet end and an MS-type connector at the dry end. The standard cable is 25 meters in length; for lengths greater than standard, contact RESON.

- The Sonar Head is compact, with no moving parts. It may be temporarily mounted on a retractable structure, such as a bracket or pole, or permanently on an extension through the hull in a moon pool, sea-chest configuration, or on a Remotely Operated Vehicle (ROV) . The head is available in a titanium alloy depth rated to 1500 meters and anodized aluminum with depth ratings of 100 and 300 meters.

- The Color (S-VGA) Monitor is a standard PC-type S-VGA monitor and should be table mounted with sufficient working area to accommodate the Trackball.

- The Trackball (or mouse) is a modified commercial three button unit.

1.1.2 How Does the SeaBat 8101 Work?

The transmit array (projector) section of the Sonar Head transmits a pulse of acoustic energy, which travels through the water medium and is reflected by the sea floor, or any objects in its path. The reflected signal is received by the receive array (hydrophone) section of the Sonar Head, digitized by internal electronics, sent to the topside Sonar Processor for beamforming and processing. The Sonar Processor generates the video displayed on the monitor and functions as the control interface between the operator and the sonar system as well as formatting a digital output to be used by a peripheral bathymetric data processing system.

1.1.3 How Far Does the SeaBat 8101 "See"?

480 meters is the maximum selectable range scale. The 8101 system illuminates a swath on the sea floor that is 150º across track by 1.5º along track. Across track beam spacing is nominally 360/240 = 1.50000º; these values are provided in each bathymetry packet header. The swath consists of 101 individual 1.5º by 1.5º beams (the 210° Option uses 141 beams) with a bottom detection range resolution of 1.25 cm.

The system was designed to International Hydrographic Organization (IHO) standards to measure the seafloor to a maximum depth of 320 meters.

If equipped with the Extended Range projector (Option 040), this depth increases to 450 meters. Refer to Chapter 4 for additional information on this option. Option 040 is standard on all deep-water versions of the SeaBat 8101 (those rated to 1500 meters submergence depth, or more).

1.1.4 How Much Seafloor Does it Measure?

With an across track subtended angle of 150º, The SeaBat 8101 measures a swath width of 7.4 times the water depth, when in depths of 1 to 70 meters. At depths greater than 70 meters, the ratio of water depth to swath coverage decreases, as noted in Table 1 (all calculations assume the center of the swath to be vertical).

Table 1, Seafloor Coverage

Depth in meters	Coverage (x water depth)
1-70	7.4
70-100	4.2*
100-150	2.7*
150-200	1.8*
200-250	1.6*
250-300	1.3*
	* typical value

1.2 Safety Precautions

The SeaBat 8101 system should be handled with attention to protection of the hardware components and operator safety. General precautions include:

DO NOT Connect or disconnect cables with power on.
DO NOT Attempt to open and service the Sonar Head.
DO NOT Operate the system while divers are in the water.
DO NOT Touch or handle any internal printed circuit boards without specific instructions from RESON.
DO NOT Operate the SeaBat 8101 system at a power setting higher than 1, while operating in air. A higher setting may damage the Sonar Head's transmit array ceramic elements.

Chapter 2 provides detailed procedures for the correct installation of the SeaBat 8101 system. Follow the steps provided for safety and to obtain the best system performance.

1.3 Hardware Components

The five major components of the SeaBat 8101 system are described below. Technical specifications and drawings are included in sub-paragraphs.

Sonar Processor

- Sends DC power to the Sonar Head via the Signal and Control cable.
- Sends control signals to the Sonar Head.
- Receives and demultiplexes digitized hydrophone signals from the Sonar Head.
- Beamforms the received hydrophone signals.
- Manages seafloor bottom detection.
- Processes the bottom detection data for local display.
- Processes the bottom detection data for export to peripheral systems such as bathymetric data acquisition systems via an RS-232 interface or Ethernet connection.
- Receives and processes operator input.
- Generates the graphical display.

Processor to Head Signal and Control Cable

- Waterproof pressure-immune connector at wet end.
- Single MS-type connector at dry end.
- Conducts operating power for Sonar Head electronics.
- Conducts control signals for Sonar Head electronics (downlink).
- Conducts multiplexed digitized hydrophone signals to the Sonar Processor (uplink).
- Shields internal signals from vessel electrical noise.

Sonar Head

- Converts received DC power from the Sonar Processor to circuit operating voltages.
- Generates and transmits acoustic pulses via the transmit array (projector).
- Receives reflected acoustic signals via the receiving array (hydrophone).
- Preamplifies and digitizes received acoustic signals.
- Multiplexes and sends digitized received signals to the Sonar Processor via the Signal and Control Cable (uplink).

Color Video Monitor

- Displays received sonar intensity data in operator selectable color palettes.
- Displays processed bottom detection data in real time.
- Displays system status and control menus for operator interaction.

Trackball

- This three-button device enables operator selection of menus, menu items, and status and control functions.
- Trackball connectors are available on the front and rear panel of the sonar processor. These connectors are wired in parallel; simply connect the trackball to the most convenient connector as there is no requirement to select either connector.

1.3.1 81-P Sonar Processor

The 8101 Sonar Processor is the power, signal, and data distribution point for the 8101 MBES system. The internal electronic configuration is a multiple processor environment consisting of CPU, DSPs, and FPGAs (see Chapter 5, Glossary of Terms). The system operating software resides in the Sonar Processor and, at power-on, downlinks configuration parameters to the Sonar Head (both the Processor and Head store their firmware in easily upgraded flash memory).

The power supply assembly auto-senses mains voltage to accommodate 90 to 260 VAC and produces the various DC voltages required by Processor and Sonar Head.

The Sonar Processor demultiplexes the signal uplinked from the Sonar Head, applies amplitude and phase adjustments, and distributes these signals to the beamforming processor. Other Sonar Processor functions include: bottom detect management, image processing, graphics processing, and I/O control. The graphics processor produces S-VGA (default) or S-Video. Auxiliary video outputs are RGB or composite. S-Video and the auxiliary outputs can be either NTSC or PAL format (see the following paragraph).

1.3.2 Display Output Interfaces

Five display formats are available as outputs from the sonar processor: S-VGA, S-Video, RGB (green sync), RGB & Sync, and Composite. S-VGA is the default output and is intended for use with the system's standard 800x600 pixel, 72Hz refresh rate, Super-VGA computer monitor. In the S-VGA mode, all other display video outputs are unavailable. The other video outputs are also available in either NTSC or PAL format.

The selection of either NTSC or PAL changes the video output to a television format for VCR recording. This format is incompatible with the system's S-VGA monitor and, therefore, it will be blanked in these modes. However, all other video formats will now be available. If an NTSC or PAL video format is selected, a separate compatible monitor must be used with the system.

The sonar processor will 'remember' the last selected video mode at power-on. To change the display mode, see Chapter 3, paragraph 3.13.

Table 2, SeaBat 8101 Sonar Processor, Technical Specifications

Power Requirements	90 to 260 VAC, 50/60 Hz, 350 W Maximum
Video Output	S-VGA, 800 X 600, @ 72 Hz Refresh Rate
Graphics Colors	256 (8-bit)
Input Device	Trackball, Mouse, or Remote Commands
Mounting	19 Inch Rack, 4U High
Dimensions	See Figure 3
Weight	20 kg (44.1 lb)
Temperature	Operating: 0º to +35º C Storage: -30º to +55º C

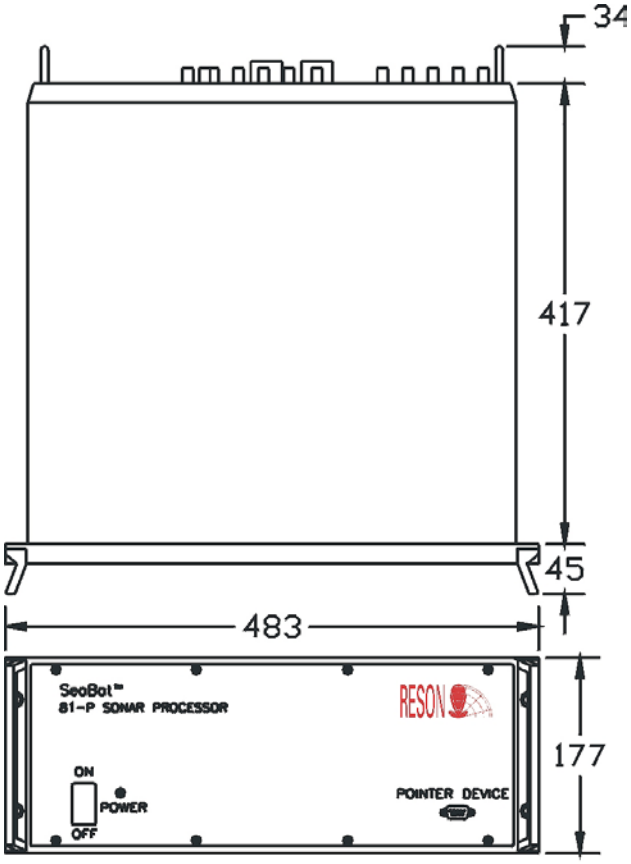

Figure 3, SeaBat Sonar Processor Dimensions (in mm)

Figure 4, SeaBat 8101 Sonar Processor

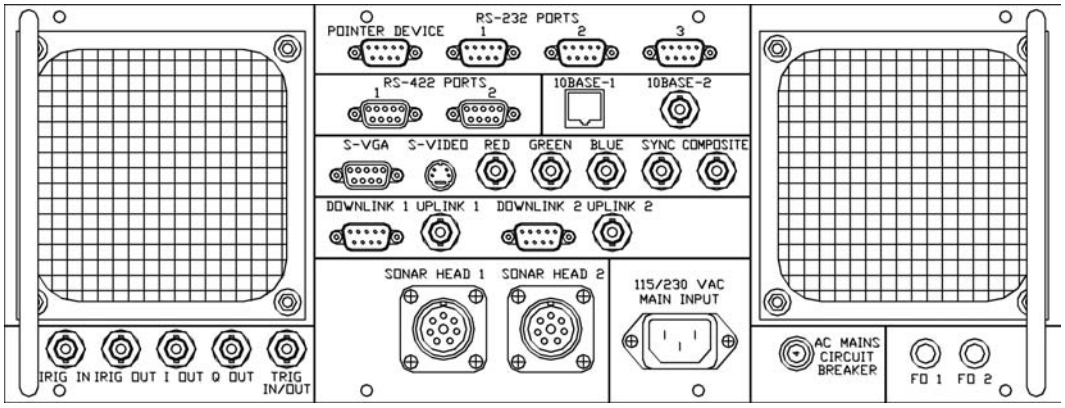

Figure 5, SeaBat 8101 Sonar Processor, Rear Panel

1.3.3 Processor to Head Signal & Control Cable

The interconnection cable between the Sonar Processor and the Sonar Head is of multi-conductor water blocked construction. This cable assembly is supplied from RESON with a molded waterproof pressure immune connector at the wet end and an MS-type connector at the dry end. The standard cable length is 25 meters; for lengths greater than standard, contact RESON. See Figure 9 and Chapter 9, drawings 10483 and 11125 for schematics of this cable assembly.

1.3.4 Sonar Head

The 8101 Sonar Head is the source of high power acoustic energy transmitted into the water and the receiving assembly for the low level signals reflected from targets or other material in the water column. The unit is constructed from either grade 5 titanium or hard anodized aluminum depending on the application.

In addition, the electronics package within the Sonar Head is comprised of:

- DC-to-DC power converter, which changes the supplied 24 VDC input power to the various DC voltages required by the internal electronics, circuits.
- Transmitter circuits to drive the transmit array (projector).
- A TVG amplification stage, followed by analog-to-digital converters required to digitize the received signals from the receiving array (hydrophone).
- Multiplex circuitry to format the uplink data stream.
- A controller that receives and executes downlink commands and controls the transmit repetition rate.
- Diagnostic electronics.

The Sonar Head power supply has been designed to operate ideally at 24 to 28 VDC. However, due to cable losses and the fact that the sonar head may be supplied with power from an external source when mounted on an underwater platform, the unit will function correctly with 20 to 30 VDC input. If the customer-supplied voltages are outside this range, contact RESON Support for additional information.

See Chapter 7 for a description of the Uplink and Downlink signal specifications.

Table 3, SeaBat 8101 Tx / Rx, Technical Specifications

Power Requirements	24 to 28 VDC, 2 A Peak (normally provided by Sonar Processor)
Sonar Operating Frequency	240 kHz
Horizontal Beam Width	Transmit (150° system): 170° (210° system): 240° Receive (150° system): 1.5° (210° system): 1.8 - 2.7°
Vertical Beam Width	Transmit (nominal) 1.5° Receive 15°
Number of Horizontal Beams	101, Centered 1.5° apart (141 beams with Option 038 installed)
Sector Coverage	150° (210° with Option 038 installed)
Ping Rates	See Table 6
Temperature	Operating: -5° to +40° C Storage: -30° to +55° C

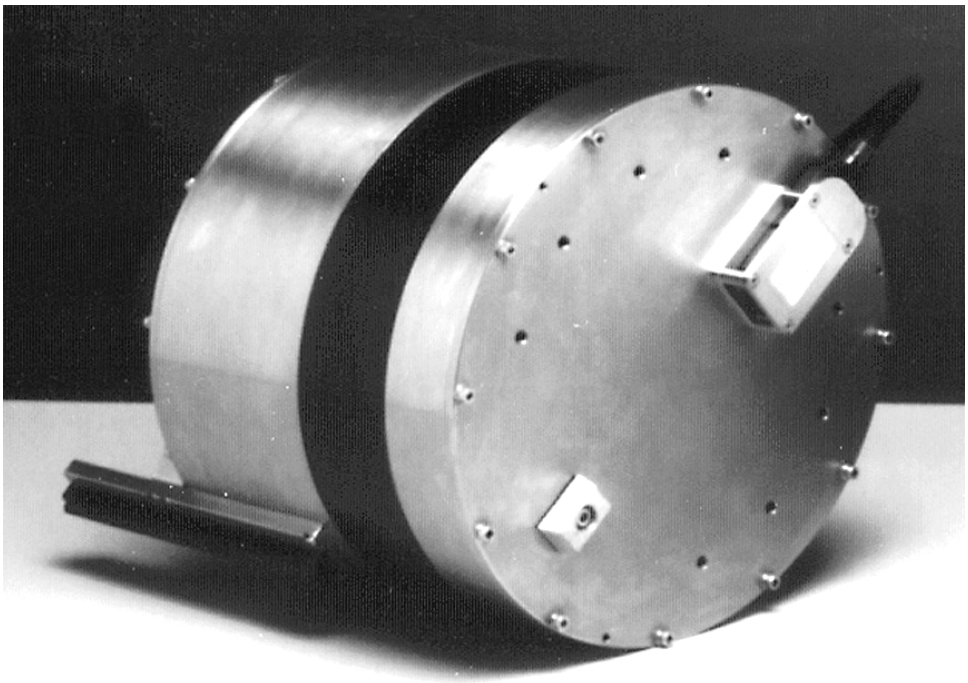

Figure 6, SeaBat 8101 Sonar Head

Table 4, SeaBat 8101 Sonar Head, Physical Specifications

Material	Titanium alloy or hard anodized Aluminum
Depth Rating	Titanium: 1500 m and 3000 m Aluminum: 120 m
Dimensions	See Chapter 9, Support Documentation, Drawing Number 99046
Weight	Titanium: Air: 40.0 kg (88 lb) Salt Water: 18.0 kg (39.6 lb) Aluminum: Air: 26.8 kg (59 lb) Salt Water: 4.8 kg (10.6 lb)
Weight with optional Mounting Brackets and Fairings in-stalled	Titanium: Air: 51.4 kg (113 lb) Salt Water: 24.3 kg (53.5 lb) Fresh Water: 24.9 kg (54.9 lb) Aluminum: Air: 38.2 kg (84 lb) Salt water: 11.1 kg (24.5 lb) Fresh Water: 11.7 kg (25.9 lb)

1.3.5 Color (S-VGA) Monitor

The SeaBat 8101 system Color Video Monitor is a standard off-the-shelf PC compatible monitor capable of accepting an S-VGA resolution of 800x600 at 72Hz refresh rate. Please refer to the manufacturer's User's Guide for additional technical information. Other monitors are available, as special options, for applications requiring NTSC or PAL video. See paragraph 1.3.2.

Table 5, color S-VGA Monitor, Technical Specifications

CRT	15" (13.8" viewable)
Input Signal	Analog RGB and Sync
Compatibility	PC
Minimum Display Characteristics	S-VGA, 800 X 600, @ 72 Hz Refresh Rate
Power	100-240 VAC, 50/60 Hz, 150W (max)
Dimensions (HWD)	360 x 380 x 381 mm (14.2 x 15.3 x 15.0 in)
Weight	12.1 kg (26.7 lb)

1.3.6 Trackball

The trackball supplied with the SeaBat 8101 system is a standard off-the-shelf three-button unit modified by RESON for use with the Sonar Processor. In the event of damage, or failure, a RESON modified replacement must be used.

1.4 Options, Upgrades, and Accessories

Refer to Chapter 4 for information and descriptions of available options, upgrades, and accessories.

1.5 Warranty Information{tc "1.5 WARRANTY INFORMATION"}

Your SeaBat warranty gives you specific legal rights. You may also have other rights which vary from country to country.

1.5.1 One-Year Limited Warranty

RESON warrants the SeaBat 8101 system against defects in materials and workmanship for a period of one year from acceptance of the system. During the warranty period, RESON will, at its option, either repair or replace components which prove to be defective.

The warranty period begins on the day the SeaBat System is accepted by the customer. The system must be serviced by the RESON office which sold the system. The customer shall prepay shipping charges (and shall pay all duty and taxes) for products returned for service. RESON shall pay for the return of the products to the customer, not including duty and taxes.

1.5.2 Exclusions

The warranty on your SeaBat System shall not apply to defects resulting from:

- Improper or inadequate maintenance by customer.
- Unauthorized modification or misuse.
- Opening of the sonar head by anyone other than an authorized RESON representative.
- Operation outside of the environmental specifications for the product.
- Improper site preparation and maintenance.
- Service provided by any but Authorized Service Facilities (see paragraph 1.6).

1.5.3 Warranty Limitations

The warranty set forth above is exclusive and no other warranty, whether written or oral, is expressed or implied. RESON specifically disclaims the implied warranties of merchantability and fitness for a particular purpose.

1.5.4 Servicing During Warranty Period

If your system should fail during the warranty period, please contact your nearest RESON representative immediately to protect your warranty rights (refer to paragraph 1.6).

1.6 Service and Assistance

For additional information and technical assistance with the SeaBat 8101 system, contact the nearest RESON office.

USA
RESON Inc.
100 Lopez Road
Goleta, CA 93117
USA

Tel: +1-805-964-6260
Fax: +1-805-964-7537

e-mail:
support@reson.com

DENMARK
RESON A/S
Fabriksvangen 13
3550 Slangerup
Denmark

Tel: +45-47-38-00-22
Fax: +45-47-38-00-66

e-mail;
support@reson.dk

UNITED KINGDOM
RESON Offshore Ltd.
Unit 1, Tern Place
Bridge of Don
Aberdeen, AB23 8JX
Scotland, U.K.

Tel: +44-1224-709900
Fax: +44-1224-709910

e-mail:
sales@reson.co.uk

GERMANY
RESON GmbH
Wischhofstrasse 1-3,
Geb. 11
24148 Kiel, Germany

Tel: +49-431-720-7180
Fax:+49-431-720-7181

e-mail:
reson@reson-gmbh.de

SOUTH AFRICA
Reson SA (Pty) Ltd.
Martello Road
Simon's Town
South Africa

Tel: +27-21-786-3420
Fax: +27-21-786-3462

e-mail:
reson@reson.co.za

NOTE

Before returning any equipment for service, you will need to follow the RESON return procedure:

1. Contact a RESON office to obtain an approved Return Material Authorization (RMA) number.
2. Pack the equipment in the original shipping containers.
3. Ship the equipment to your RESON representative at the applicable address. Insure that the RMA number is included on all shipping documents and, most importantly, marked on the shipping container's address label.
4. Include a note with a brief but thorough description of the problem.

Chapter 2 - Installation

2.1 Introduction

This chapter describes the installation procedures for the SeaBat 8101 Multi-beam Echosounder Sonar system. For a first time installation, read this chapter in its entirety before starting. Sub-sections of this chapter are:

- Handling equipment safely
- Component check list
- System installation

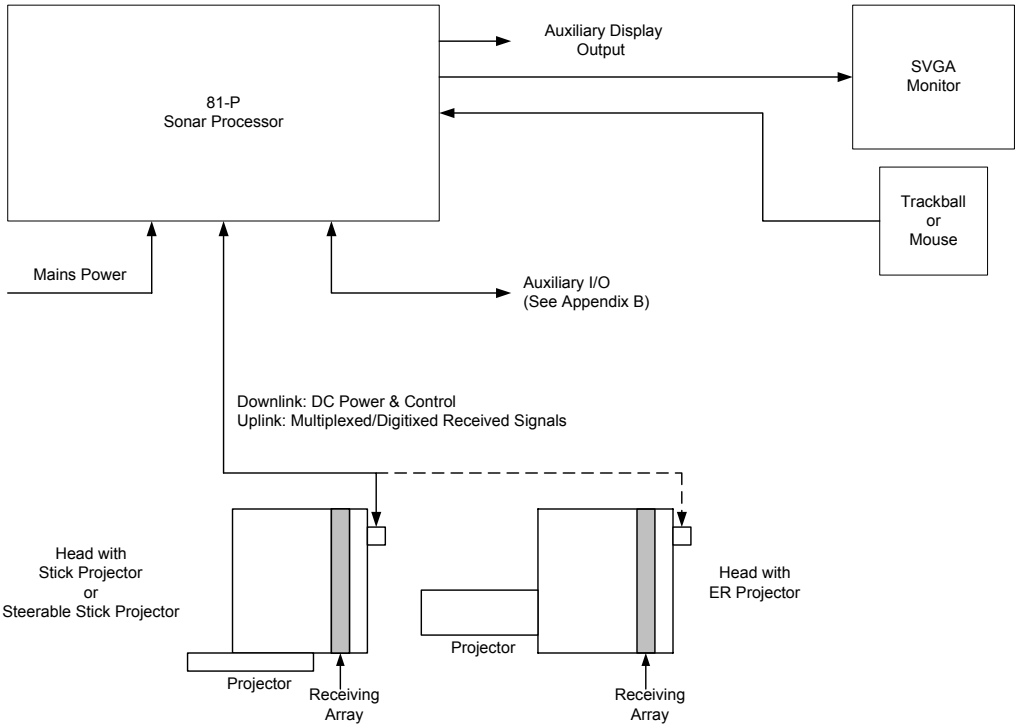

Figure 7, Basic SeaBat 8101 Layout

2.2 Handling Equipment Safely

Each SeaBat 8101 major component, while in its own transit case or shipping box, is sufficiently robust for shipboard storage and requires only normal care and handling to prevent breakage. The transit cases provide handles, which allow two people to carry each piece of equipment easily and tie down rings for securing the cases in shipboard storage areas.

To ensure safe handling of the equipment:

1. Inspect each transit case or shipping box for physical damage prior to opening.
2. Inspect each component for physical damage before installation. Check for obvious damage and abuse, including splits, dents, cracks, broken controls, scratches, lodged foreign objects, damaged connectors, excess moisture, and burn marks.
3. Use adequate packaging and shock-absorbing materials to ship or store any equipment or accessories that are stored outside of the supplied transit cases.
4. Do not drop the equipment or place the head in an area where the faces of the projector or hydrophone may be scratched or damaged.
5. Do not place liquids on or near the equipment where the liquid might spill into the pointer device or electronic components.
6. Do not smoke or spill ashes on or near the pointer device.

Ensure that the equipment is properly secured before putting out to sea.

2.3 Component Checklist

After unpacking the transit cases, perform an inventory check using the packing/shipping list. Note that smaller items, such as power cords, manuals, etc. may be stored in the lids of the cases, under the foam padding.

2.4 Location of System Units

The SeaBat 8101 system has five standard units that require proper placement on the survey vessel or platform:

1. Sonar Processor
2. Sonar Processor to Sonar Head Signal and Control Cable
3. Sonar Head
4. Color Video Monitor
5. Trackball

NOTE

RESON recommends that, for added protection, the equipment be moved to a location near the operating position before the cases are opened.

Prior to installation, consideration should be given to the following items.

- The Sonar Processor should be located in an area that is not exposed to the weather but within the 25 meter length of the interconnection cable. If a longer cable is required, contact RESON engineering. This unit may be rack or table mounted in the general vicinity of the operator; close enough to allow easy access to the front panel On/Off switch and to allow the connection of the Trackball and Monitor cables. Note that the trackball can be connected to either the front or rear panel of the Sonar Processor.

- The Sonar Processor to Sonar Head Signal and Control Cable should be routed with no tight bends (see paragraph 2.4.5.2) or strain on either connector, away from sharp edged metal structures, and sufficiently protected from foot traffic. Do not stretch this cable to make a connection. If necessary, move the equipment to allow a strain-free connection.

- The Sonar Head must be securely mounted in a relatively turbulence free area and as far away from any hull mounted machinery as possible. If the mounting device is a moveable or retractable pole, care should be taken to minimize any Sonar Head motion due to bending or vibration of the pole. In addition, verify that the pole attachment hardware is not a source of rattling, or other mechanical noise. Another consideration in placement of the head, is the 25 meter length of the cable to the Sonar Processor. If a longer cable is required, contact RESON engineering.

- The Color Video Monitor and Trackball are the primary tools for the operator and should be located in a reasonably comfortable work area with a suitable flat surface to allow access to operating logs, and note books.

1. Place the monitor on a surface that allows a comfortably seated operator to view the screen at a 10 to 40 degree downward angle. Allow adequate air circulation to prevent internal heat build-up. Do not place the monitor on surfaces (rugs, blankets, etc.) or near material (curtains, draperies) that may block the ventilation openings.
2. Do not install the monitor in a location near heat sources such as radiators or air ducts, or in a place subject to direct sunlight, excessive dust, mechanical vibration, salt spray, or shock.
3. Use equipment straps, clamps, or other securing devices to ensure that the installation is seaworthy.

2.4.1 General Installation Guidelines

The sonar head is supplied with a full set of installation drawings intended for use in fabricating unique mounting hardware is provided in Chapter 9 of this manual. If the mounting structure is movable, such as an over-the-side pole, use care in positioning the sonar head to sonar processor cable to avoid damage when mov-

ing. Allow sufficient bend radius for the cable (see paragraph 2.4.5.2) and ensure that there is no strain at the connector when the structure is in either the stowed or operating position. If cable clamps are used, protect the cable jacket from sharp edges on the clamps. Position the head so that the projector and hydrophone have an unobstructed line of sight to forward and a minimum of 75 degrees to either side (105 degrees for a 210 degree head).

The location of the head should be chosen to be as far away from other sources of acoustical energy and mechanical hull-borne noise as possible. High ambient noise will degrade 8101 system performance. In addition, the location should allow relatively easy access to the head for preventative maintenance and inspection. In the case of an ROV installation, place the head in a location to ensure that it does not "see" any part of the ROV structure. A typical location is slightly forward and above the bottom plane of the ROV.

2.4.2 Installing the Sonar Head

The sonar head may be permanently mounted, as part of the vessel's structure or mounted on a temporary structure such as a pivoting or retractable pole. The head requires accurate placement and precise alignment in azimuth and elevation. In addition, the head must be securely mounted to ensure that both location and alignment cannot shift during a survey. Careful consideration must be given to the routing of the sonar head to sonar processor cable to avoid cutting or abrading the outer waterproof jacket. If the installation is part of an ROV/UUV, locate the sonar head as far from hydraulic pumps or other rotating machinery as is possible in the confined space of the vehicle. In addition, place the head as far forward as possible and at least a meter above the bottom plane of the vehicle.

2.4.3 Orientation of the Sonar Head

The sonar head should be mounted with the array center scribe mark oriented straight down with the projector pointing aft (see Chapter 9, Drawing 10723). Care should be taken to ensure that the head is parallel, as closely as possible, to the horizontal plane of the vessel or ROV. Small errors in mounting can be compensated for by post-processing data acquisition software.

2.4.4 Sonar Head Acoustic Center

Figure 8 provides the acoustic center location (the intersection of lines Y-Z and X-Z) required for Vessel Reference Point (VRP) measurement. This is the point to which the offset measurements (in relation to the VRP) are made for the multibeam system. Figure 8 illustrates a sonar head with a stick projector installed. For sonar heads equipped with an Extended Range (ER) projector, the acoustic center will be the same as shown in Figure 8 (the slight offset is compensated for in the system’s software). See also paragraph 3.10.5.

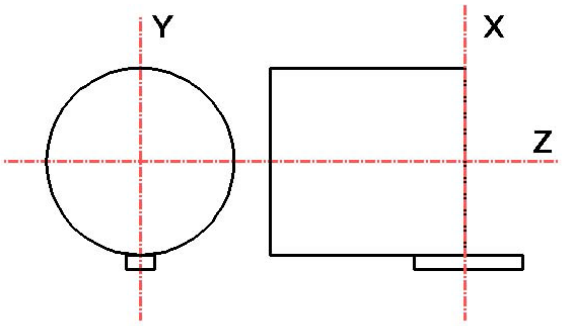

Figure 8, Sonar Head Acoustic Center

2.4.5 Installing the Processor to Sonar Head Cable

There are two general installation scenarios, shipboard and ROV/UUV. The following is a brief discussion of each installation.

2.4.5.1 Shipboard Installation

The standard shipboard cable is 25 meters in length. Prior to securing the cable in place, verify that there is sufficient slack at the wet-end to allow an easy on/off connection process. There should be no tight bends or strain on the connector section when fully mated (see paragraph 2.4.5.2). If applicable, do not put the last cable clamp in place until the connector is attached and secure. Place small plastic bags, or other protective wrapping, over the exposed cable ends during the process of putting the cable in place.

CAUTION

Verify that mains power is OFF prior to making, or breaking, any system cable connection.

The cable connection at the sonar head is a 9-pin waterproof pressure immune connector. Before connecting, ensure that both male and female connector sections are clean and dry. Use alcohol or fresh water and a lint-free cotton swab to remove any dust or residue. A very light film of 3M Silicone Spray (or equivalent) on the mating surfaces will allow a smooth connection. When the connector set is fully mated, RESON recommends the use of tie-wraps to lock the two halves together of prevent inadvertent separation.

The dry-end of the cable should have enough slack to allow the sonar processor to be withdrawn from its rack-mounted position. This end of the cable has a pre-wired MS-type connector and a back shell that provides the required strain relief. Prior to connecting, ensure that both the male and female halves of the connector set are clean and dry. Use a small brush to remove any accumulated dust and debris.

2.4.5.2 Cable Bend Radius

IMPORTANT

The Sonar Head to Processor cable can be damaged by a tight bend. Use a minimum bend RADIUS of 150 mm (6 in) or a minimum bend DIAMETER of 300 mm (12 in) for this cable.

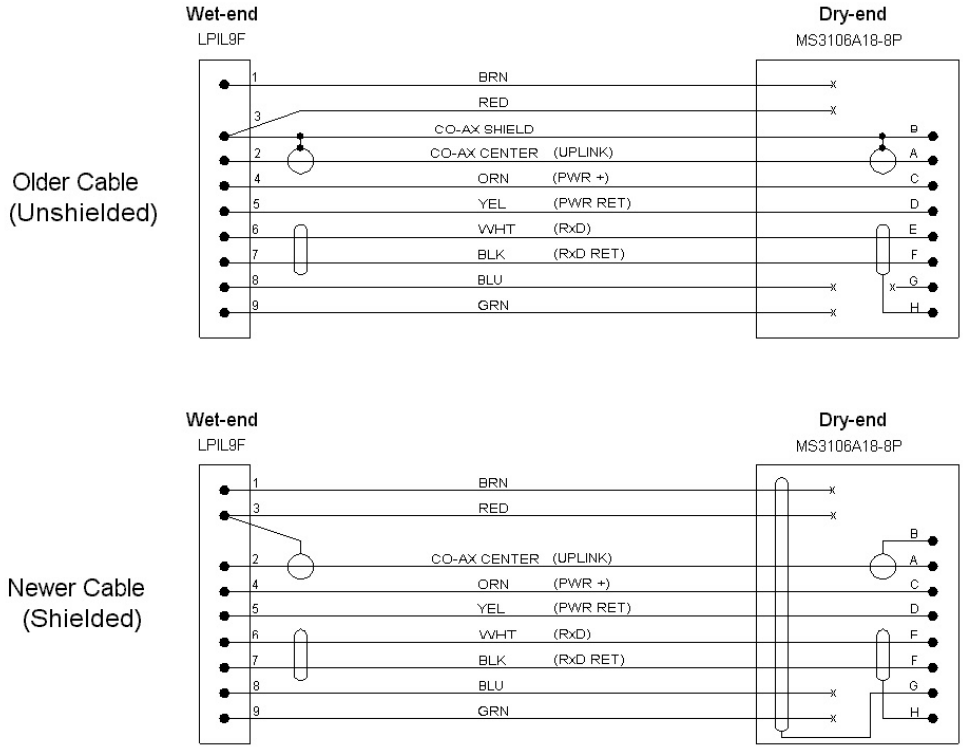

Figure 9, Cable Schematics

Figure 9 has been provided to assist the installer in the event that this cable, or one of its connectors, has been damaged. See Chapter 9, engineering drawings 10483 (Unshielded) or 11125 (Shielded) for additional information on this cable assembly.

2.4.5.3 Cable Length

The standard, off-the-shelf, length of the Sonar Head to Processor cable is 25 meters. This length can be increased to a maximum of 150 meters by making compensating circuit adjustments in the Sonar Processor. For information on non-standard length cables, contact RESON Engineering.

2.4.5.4 ROV/UUV Installation

Many of the comments about shipboard installation are applicable to an ROV/UUV installation. There should be no tight bends or strain on the connector section when fully mated (see paragraph 2.4.5.2). If applicable, do not put the last cable clamp in place until the connector is attached and secure. Place small plastic bags, or other protective wrapping, over the exposed cable ends during the process of putting the cable in place.

The cable connection at the sonar head is a 9-pin waterproof pressure immune connector. Before connecting, ensure that both male and female connector sections are clean and dry. Use alcohol or fresh water and a lint-free cotton swab to remove any dust or residue. A very light film of 3M Silicone Spray (or equivalent) on the mating surfaces will allow a smooth connection. When the connector set is fully mated, RESON recommends the use of tie-wraps to lock the two halves together of prevent inadvertent separation.

CAUTION

Verify that mains power is OFF prior to making, or breaking, any system cable connection.

The sonar head to sonar processor cable must be modified to accommodate the umbilical cable. A typical installation uses a shortened version of the standard cable (wet-end only) to connect the head to a junction box on the vehicle. In this configuration, the vehicle supplies the 24 VDC operating power for the head and serves the connection point for the uplink and downlink signals. The topside termination will have customer furnished cables from the topside umbilical termination device to the rear of the sonar processor. A possible variation is splicing the dry end of the standard cable into the topside umbilical termination device. RESON recommends the use of a fiber-optic Uplink for this type of installation due to the bandwidth and impedance requirements of this signal.

2.5 Corrosion Avoidance Guidelines

2.5.1 Aluminum Alloy

The standard 8101 Sonar Head housing is composed of an aluminum alloy. This head is provided with zinc alloy sacrificial anodes to protect it from galvanic corrosion while immersed in seawater. If the system is to be used in freshwater, magnesium alloy sacrificial anodes will be provided. Do not paint the anodes. The anodes should be inspected periodically for cleanliness and good physical condition. If an anode is loose, it must be replaced immediately, if not firmly attached its effectiveness is greatly reduced. In addition, it is imperative that the head be isolated electrically from the mounting structure for the following three reasons:

1. Stray currents may exist on the mounting structure (vessel, ROV, towbody, etc), and it is mandatory to keep the head isolated from these currents.

2. Aluminum alloy has a higher electrode potential than many commonly used structural materials such as steel, stainless steel, and titanium; therefore the aluminum sonar housing will suffer from galvanic corrosion if in direct contact with them while submerged in seawater.

3. If the sonar head is not electrically isolated from the structure, the attached anodes will attempt to protect the entire structure from galvanic corrosion, rather than just the sonar head. These anodes are not sized for this task, and will erode very quickly.

2.5.2 Titanium

The optional 8101 Sonar Head housing is composed of titanium, and will not corrode. However, RESON strongly recommends that it be installed so that there is complete electrical isolation between the housing and the mounting structure. This is done for two reasons.

1. Stray currents may exist on the mounting structure (vessel, ROV, towbody, etc). It is advisable to keep the head isolated from these currents.
2. Due to the extremely low electrode potential of titanium, it is noble to nearly all other metals when immersed in seawater. Therefore, if it not isolated, it can cause galvanic corrosion of the mounting brackets and hardware, and place an additional load on the mounting structure's sacrificial anodes, causing them to erode very quickly.

2.5.3 Isolation

Electrical isolation for both the Titanium and Aluminum heads is typically achieved by insulating them from the mounting brackets by the use of non-conductive bushings, washers, and isolation plates. These materials can include delrin, G-10 glass fiber sheets, and/or high-density polyethylene sheets. Contact RESON Engineering for additional information on sacrificial anodes or schemes for electrical isolation

2.6 Ping Hold-off Feature

This paragraph applies only to systems that have Dry Firmware version 8101-2.04-83E4 installed, and not to a standard 8101 system.

The addition of the “Ping Hold-off Feature” provides a method to synchronize the 8101 transmissions (pings) to a external controller device. No operator action is required, once the appropriate signal source has been connected to the system, as described below.

The Ping Hold-off input signal is connected via a connector attached to the dry end of a modified Processor to Head cable. This input signal is opto-isolated, and accepts TTL, CMOS, RS-232, and similar voltage levels (see Figure 10).

Approximately 500 microseconds before the midpoint of each ping, the ping timer (in the sonar head) samples the Ping Hold-off input signal. If the input is OFF, the timer continues counting and pings normally. If the input is ON, the timer stops counting, waits for the input to turn OFF, and then resumes counting and pings.

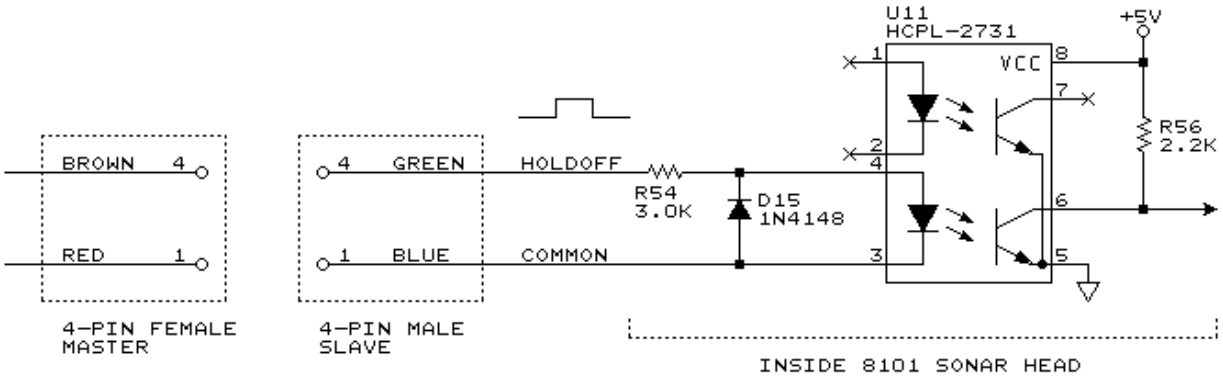

Figure 10, Ping Hold-off Details

This page intentionally left blank.

Chapter 3 - System Operation

3.1 Introduction

This chapter describes the operation of the SeaBat 8101 Multibeam Echosounder (MBES) system. The SeaBat 8101 uses a color monitor to display system operational information in real time. Access to system menus is accomplished by selecting the item of interest on the display screen with a click of the track ball. Sample menus and descriptions of all menu items are provided in this chapter.

3.2 Start-Up Procedure

Initial System Check-Out: As part of the system installation, all operational features should be tested for proper operation.

Verify all cable connections are properly connected and fastened tightly. Connection points are: cables at the rear panel of the Sonar Processor and the connection at the Sonar Head. Verify also that proper mains voltage is available.

NOTE

To ensure proper auto-calibration, do not power up, reboot, or calibrate the system when the Sonar Head is being deployed or retracted, as any mechanical noise may affect the measurements.

1. Energize the Sonar Processor and monitor.
2. Verify the presence of the main sonar display screen (see Figure 11). The apex of the wedge represents the location of the Sonar Head. Note that the Sonar Processor will 'wake up' with the settings used by the last operator.
3. Verify that the correct date and time are displayed. See paragraph 3.3.3 of this chapter for additional information on setting date and time.
4. Verify that the BITE button in the upper left corner of the main sonar display screen is green. Refer to BITE Button section for instructions on BITE screen operation (paragraph 3.11).

CAUTION

If the Sonar Head is not submerged, limit the transmitter power to 1 (TxPower in the Main Menu) to avoid possible damage to the projector array.

5. If the Sonar Head is submerged, verify the active sonar display. Refer to the Main Menu for instructions on setting transmitter output power.
6. Verify data I/O functions. Refer to paragraph 3.11 for a description of BITE functions

If the system has been operated previously, not all of the previous steps may required. The normal start sequence should be steps 1 through 5. See also, paragraph 3.13 of this chapter if it is necessary to change the system display mode.

3.3 Overview of Display Selections

There are two display screens, the default Main Sonar Display Screen for normal operation and the Built-In Test Environment (BITE) Screen which displays diagnostic and configuration information. Using the button at the top left of each screen, the operator may toggle between the display and BITE Screens.

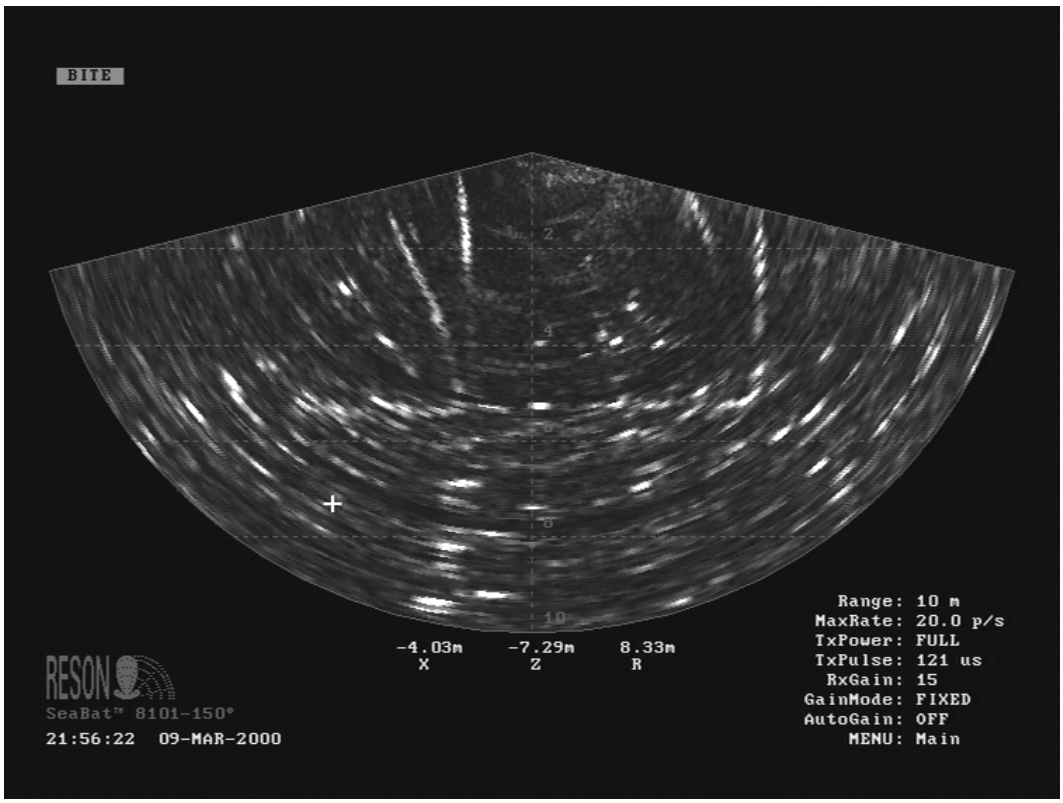

Figure 11, SeaBat 8101 Main Sonar Display Screen

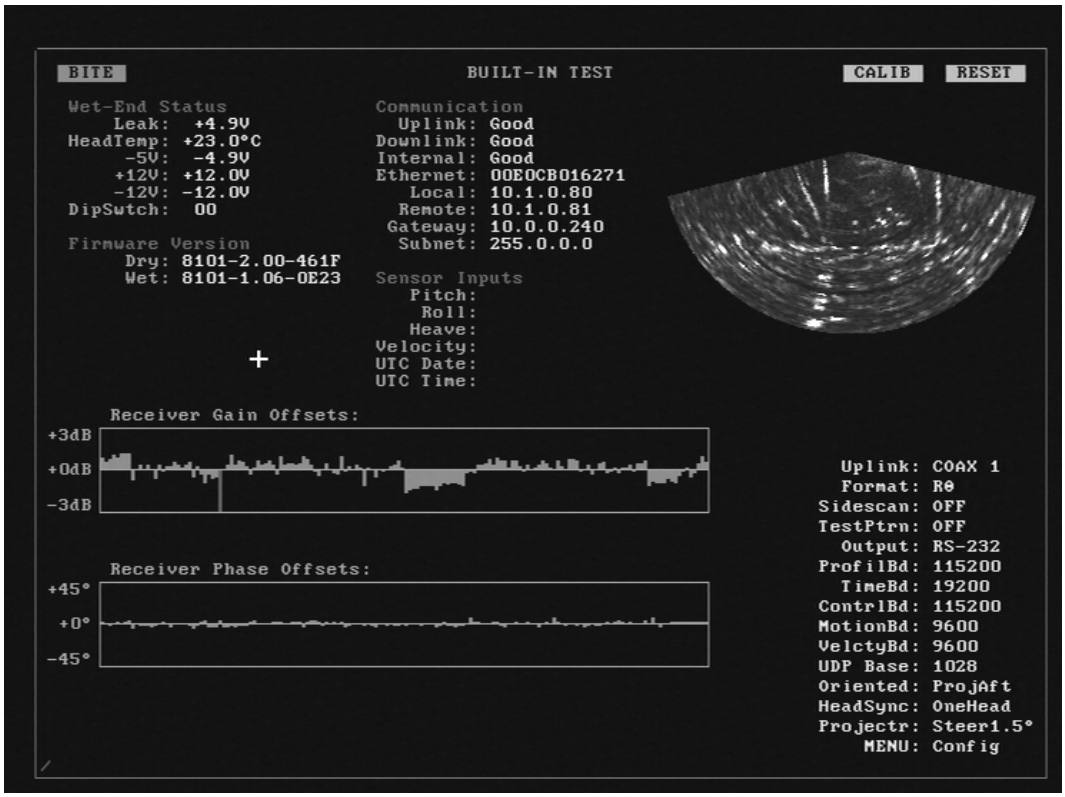

Figure 12, SeaBat 8101 BITE Screen

The main display screen contains a wedge-shaped image, which shows within its borders, the complete water column illuminated by a single transmitted "ping". Features of this display screen are:

1. BITE Button
2. Sonar data image
3. Date/Time Block
4. Cursor Position Block
5. Operation Menu block

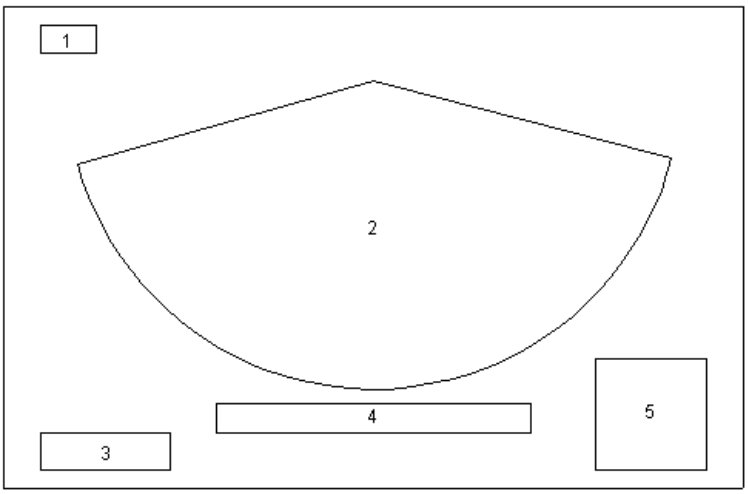

3.3.1 BITE Button

See paragraph 3.11 for a description of the BITE function.

3.3.2 Sonar Data Image

The current swath image will be shown in this area. Select the appropriate range scale to keep the horizontal bottom image at, or above, the widest part of the wedge.

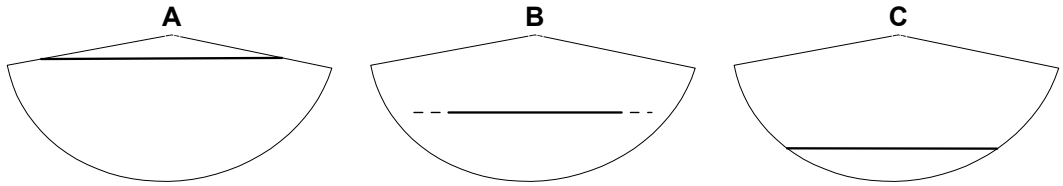

Figure 13, Swath Position

Illustration A shows the proper range setting. Illustration B shows an acceptable range setting for a swath that is starting to fade due to the effects of attenuation and spreading loses. Illustration C shows an incorrect range setting - the still useable ends of the swath are being cut off by the limits of the range setting.

3.3.3 Date/Time Block

The current system date and time are displayed here. The date/time presentation is intended for reference use by the operator and is not required for 8101 system operation. Date/time is input from an external source via a serial link into the 81-P processor. See Chapter 6 for a detailed description of the interface required for this input.

3.3.4 Cursor Position Block

When the cursor is within the boundary of the wedge, the cursor's X, Z, and R position is displayed in this block. X = Across Track, Z = Depth, and R = Range. This notation is blanked when the cursor leaves the wedge.

3.3.5 Operation Menu Block

Located in the lower right corner, this block indicates current operator selections. Each menu item is operator-configurable. To change the configuration of any item:

- Place the cursor over the item to be changed so that a box appears around the title and value. Keep the cursor symbol within this box.
- The selected item's value can be changed by clicking the left and right track-ball buttons up or down as desired. Holding down the trackball's center button while pressing the left or right button speeds the rate of change.
- Click on MENU to cycle to the next menu.
- The five available Operation Menus are:

Main Menu	Range MaxRate TxPower TxPulse RxGain GainMode AutoGain	**Filters Menu**	Filter MinRange MaxRange MinDepth MaxDepth HeadTilt
Ocean Menu	Spread Absorb Velocity	**Display Menu**	Color Contrast Dots Grid Freeze
Menu Off	Off		

Two additional I/O and communications menus Config and Modes are available via the BITE screen (refer to paragraph 3.9, 3.10, and 3.11 for a description of these menus and the BITE functions). The following paragraphs describe each Operation Menu block item and the selections offered.

3.4 Main Menu

This menu is the primary sonar control point. The selections are:

3.4.1 Range

The Range setting determines the ping rate and how far down the 8101 system will "see". This menu item allows the operator to select any one of the system's range settings. See Table 6 for range scale vs. ping rate values.

3.4.2 MaxRate

This menu selection allows the operator to limit the number of pings per second and therefore, the associated bathymetry packet output transfer rate. The ping range available is from 1 to 40 per second. Selecting an Ethernet output format, rather than a serial format, will allow the maximum transfer rate to be achieved.

NOTE

The number of output profiles per second is primarily governed by the update (ping) rate which, in turn, is controlled by the range selected. Ping rate is determined by the 'round-trip time' - the time taken for the acoustic energy from the transmit array to travel to the maximum range selected, and return to the receive array. This time is also strongly affected by the local speed of sound in water. See Table 6 for ping rates at a sound velocity of 1500 meters/sec.

3.4.3 TxPwr

This menu selection allows the operator to increase, or decrease, the amount of power (acoustic energy) transmitted into the water. The selections are OFF, and power settings of OFF, 1 through 7, and FULL. Each increment is approximately 3dB. FULL yields a Source Level of approximately 210dB re 1μPa @ 1m with the standard stick projector. The optional Extended Range (ER) projector, the level 8 output power increases to 220dB re 1μPa @ 1m.

3.4.4 TxPulse

The transmit pulse width selection allows the operator to change the pulse width of the transmitted signal. For a given power setting, the narrower the pulse width, the higher the degree of resolution that can be obtained; but the range capability will suffer. A longer pulse width increases the average power of the transmit pulse and increases the range but decreases the resolution.

The pulse widths available are from 21μs to 225μs in increments of approximately 4μs. A pulse width of 75μs is typical for most applications. The minimum recommended pulse width is 33μs.

3.4.5 RxGain

This menu item allows the operator to select the amount of receiver gain applied to the returned sonar signal. RxGain has two independent settings; TVG and FIXED. TVG has a range of 1 to 45 in 1dB steps while FIXED gain is a nonlinear scale.

3.4.6 GainMode

The gain mode menu selection provides the operator with a the ability to apply different type of gain to the received signal. The gain modes available are:

FIXED: This mode applies a fixed (does not vary with time) gain to the returned signal. It is normally only used for very short range operation (less than 10 meters).

TVG: The Time Varied Gain mode applies a variable gain to the returned signal, based upon the formula:

$$\text{Receiver gain} = 2\,\alpha\,R + Sp \log R + G$$

Where:
α = Absorption loss in dB/km
R = Range in meters
Sp = Spreading loss coefficient
G = Receiver gain

Both the absorption (α) and spreading loss values can be changed by the operator at the Ocean Menu using the menu items ABSORB and SPREAD. When switching between FIXED and TVG gain modes, the last gain value in each category is restored upon selection.

3.4.7 AutoGain

The automatic receiver gain function analyzes the bottom return and automatically increases or decreases the receiver gain accordingly. The AutoGain menu item controls the level of signal amplitude threshold to which the sonar return is compared.

Operator settings are OFF and 1 to 10. The lower the selected number, the lower the threshold and therefore, the lower the gain setting selected by the Sonar Processor. A typical setting is 4. However, the optimal setting will vary with bottom type and other environmental conditions.

NOTE

Good bottom detect conditions must be present before the AutoGain function will perform properly.

3.5 Ocean Menu

The Ocean Menu allows the operator to enter various correction factors to compensate for changing environmental conditions. Menu selections are:

3.5.1 Spread

This selection allows the operator to enter the amount of cylindrical and spherical spreading loss that is expected through the ambient water medium. This coefficient value is used in conjunction with the absorption loss value (ABSORB) to recompute the TVG curve that will be applied to the returned signal (see the GainMode menu selection). The range available is from 0 to 60. An initial value of 30 is recommended.

3.5.2 Absorb

This selection allows the operator to enter the amount of loss expected through the ambient water medium. This value is used in conjunction with the spreading loss value (SPREAD) to recompute the TVG curve as described above. The range available is from 0 to 120 dB/km. If the exact value is not known, a value of 70 dB/km for salt water and 20 dB/km for fresh water is recommended.

3.5.3 Velocity

The displayed value is the speed of sound through the local water at the Sonar Head (in meters per second) that the Sonar Processor will use in projector steering computations. Output data packets are not corrected for a sound velocity pro-

file (SVP); this function is normally performed in the Bathymetry Data Acquisition System (e.g. 6042).

The velocity menu item allows the externally measured speed of sound to be entered directly into the 8101 system. The range allowed is from 1350 to 1600 meters per second. If the local sound velocity is not known, a value of 1480 to 1500 for open sea areas and 1425 meters/sec for fresh water is recommended. Figure 3-4 illustrates typical surface sound velocity at different temperatures and salinity. These curves should be used only as a general guide.

NOTE

If a sound velocity probe is interfaced to the Sonar Processor, the VELOCITY value will automatically indicate the value from the instrument and cannot be changed by the operator.

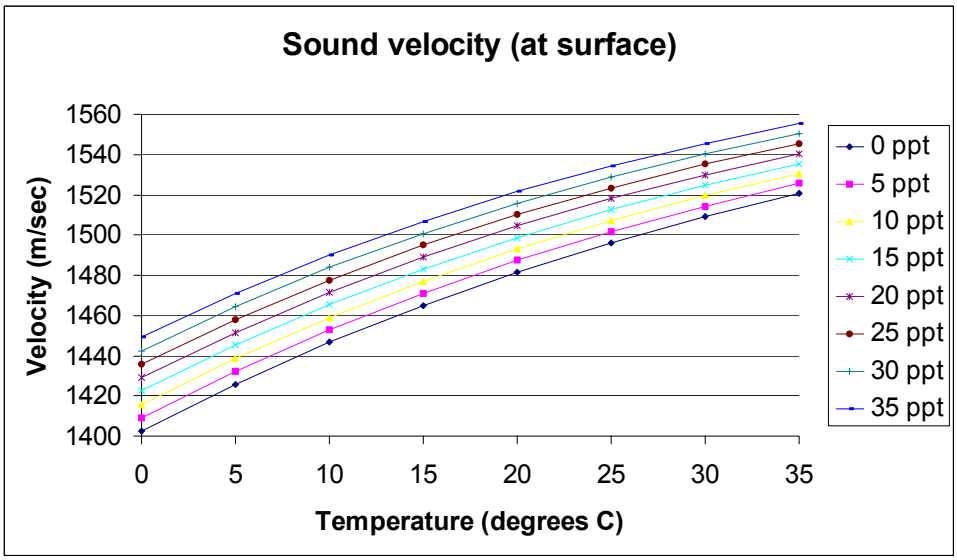

Figure 14, Typical Sound Velocity Values

IMPORTANT

A sound velocity value, at the face of the projector, is REQUIRED for best accuracy when using the Optional Pitch Stabilized Projector. This may be from an installed probe, from a remote serial input, or direct operator input. Failure to provide the correct sound velocity will affect beam steering calculations.

3.6 Display Menu

The display menu is provided to allow the operator to configure the display elements to suit individual tastes and operating conditions.

3.6.1 Color

Six pre-set color schemes are available. The color Palette dictates the color-coded amplitude values for the sonar wedge area.

Low to High amplitude color selections are:

Blk-Wht:	Continuous Black to White
Black:	Black only (very high contrast)
Dark:	Continuous Black to Dark Blue
Dim:	Continuous Dark Blue to Light Blue
Blu-Yel:	Continuous Dark Blue to Yellow
Vivid:	Continuous Dark Blue to Red

3.6.2 Contrast

This menu item allows the operator to set the contrast level for the display. This setting has no effect on the data itself. Scaling factors available are X1.0, x1.25, x1.5, and x2.0. The higher the number, the greater the contrast. A typical contrast value is x1.5.

3.6.3 Dots

The Dots menu provides the operator with the option to color-code each sounding dot, depending on various factors. The choices available are:

Off:	No dots are displayed.
Normal:	Only soundings with a quality value of 3 are displayed. All dots are white.
All:	All soundings are white, regardless of their quality or bottom detection process.
Quality:	Each sounding is displayed based upon the quality value assigned: Gray: Quality 0 - poor colinearity, poor brightness Red: Quality 1 - poor colinearity, good brightness Green: Quality 2 - good colinearity, poor brightness Cyan: Quality 3 - good colinearity, good brightness
Process:	Each sounding is color-coded based upon the weighting used in the Magnitude/Phase bottom detection process. Red: Magnitude detection Green: Phase detection Cyan: Blended magnitude/phase detection

3.6.4 Grid

This menu selection allows the operator to control the display of the border and scale lines around, and within, the sonar wedge. The menu selections are:

Off:	Displays only the sonar image data
Border:	Displays the sonar image data plus a border around the "wedge"
Lines:	Displays Border plus depth scale lines
Full:	Displays Border and Lines plus annotation of the depth scale in meters

3.6.5 Freeze

Selecting Freeze stops the update of the sonar image. Used to allow a second, or prolonged, look at a particular item on the display while the image if "frozen". Survey data collection is not affected by this setting.

3.7 Filters Menu

This menu allows the operator to apply range and/or depth filters to the bottom detect process to aid in noise reduction. Motion sensor inputs are required for the use of dynamic depth and range gates. See Chapter 6, paragraphs 6.2.1.3, 6.3.1.26, and 6.3.4 for additional information about the motion sensor interface. The menu selections are:

3.7.1 Range

This function applies the minimum and maximum range values entered (Min-Range and MaxRange) to the software filter. Only bottom returns within these range limits will be used in the bottom detection process.

3.7.2 Depth

This function applies the minimum and maximum depth values entered (Min-Depth and MaxDepth) to the software filter. Only bottom returns within these depth limits will be used in the bottom detection process.

3.7.3 Both

This function allows the use of both range and depth filters to limit returns used for the bottom detection process.
detection process.

NOTE

The simultaneous use of both range and depth filters is not recommended

3.7.4 None

No filters are activated.

3.7.5 HeadTilt

The value entered here rotates the layer formed by the depth gates. Use this function to compensate for a sonar head with a roll offset in its mounting structure. The adjustment range is plus or minus 180 degrees in one degree steps. See Chapter 8 for additional information on the head tilt function.

3.8 Menu Off

This menu item offers the operator the option of no menu display. If Off is selected the menu block collapses to a single line. Click this line and the current menu will reappear.

3.9 Configuration Menu

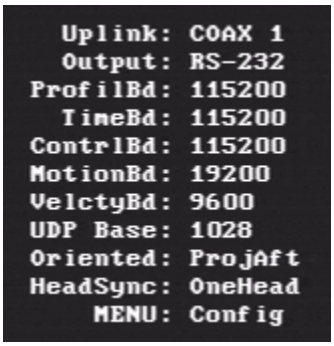

The configuration menu is accessible only through the BITE screen. Configuration menu items are made available to allow the operator to integrate the SeaBat 8101 system into any specific survey vessel or platform.

3.9.1 Uplink

This menu item selects the uplink port to be used. The selections available are COAX 1, COAX 2, FIBER 1, and FIBER 2.

3.9.2 Output

This selection allows the operator to change the method by which the measured profile is output from the Sonar Processor. See Chapter 6 for a detailed description of the format of the output data packets. The selections available are:

RS-232 — With this selection, the profile data will be output via the Serial Port #1 on the rear panel of the processor. Each data packet will be transmitted at the speed selected (see ProfileBd), at the interval based upon the range and data rate (see MaxRate) selected, and in a format selected by (Format).

Ethernet: — With this selection, the profile data will be output via the Ethernet connection on the rear panel of the processor. Each data packet will be transmitted at a rate based on the range and data rate (MaxRate) selected and in a format selected by (Format). The Ethernet

connection allows for much higher transmission rates of the data packets.

3.9.3 ProfileBd

This menu selection controls the baud rate for the data packets when the system is in the RS-232 output mode. The baud rates available are 1200, 2400, 4800, 9600, 19200, 38400, 57600, and 115200. See Chapter 6 for additional details.

3.9.4 TimeBd

This menu selection controls the input baud rate for time synchronization packets from a data acquisition system. The baud rates available are 1200, 2400, 4800, 9600, 19200, 38400, 57600, and 115200. See Chapter 6 for additional details.

3.9.5 ContrlBd

This menu selection controls the input baud rate for control messages from an external program. The baud rates available are 1200, 2400, 4800, 9600, 19200, 38400, 57600, and 115200. See Chapter 6 for additional details.

3.9.6 MotionBd

This menu item selects the baud rate to match the input form the Motion Reference Unit (MRU) (e.g. TSS, RESON VRU, Seatex, etc.) The baud rates available are 1200, 2400, 4800, 9600, 19200, 38400, 57600, and 115200. See Chapter 6 for additional details.

3.9.7 VelctyBd

This menu item selects the baud rate to match the input from a CTD sensor. The baud rates available are 1200, 2400, 4800, 9600, 19200, 38400, 57600, and 115200. See Chapter 6 for additional details.

3.9.8 UDP Base

This item allows the operator to define the base UDP Port number for Ethernet communications. Enter the "base" UDP port number and the other required ports will be selected automatically. As an example: assume that the UDP base number "N" is 1028. Then, as shown below, N+1 = 1028+1 = 1029.

N+0	UDP_PORT_BATHY	Bathymetry data output
N+1	UDP_PORT_SIDESCAN	Sidescan data output
N+2	UDP_PORT_CONTROL	Remote control of menu items
N+3	UDP_PORT_ALARM	Status message output
N+4	UDP_PORT_SNAPSHOT	Snapshot data output
N+5	UDP_PORT_RAW	Special data output
N+6	UDP_PORT_SNIPPETS	Snippets data output
8100	UDP_PORT_DOWNLOAD	Firmware download input**

** this port is unaffected by the base UDP number.

3.9.9 Oriented

Defines whether the sonar array is oriented with the projector forward or aft of the hydrophone. The two selections available are:

ProjFwd:	The Sonar Head is oriented with the projector installed forward (in the direction of travel).
ProjAft:	The Sonar Head is oriented with the projector installed aft (opposite to the direction of travel). <u>This is the preferred orientation.</u>

3.9.10 HeadSync

Enables the operator to define the sonar operation as a stand-alone system or as part of a dual-array system.

OneHead:	The sonar operates as a stand-alone system with no synchronization.
Master:	The sonar operates in the dual-head mode as the master unit.
Slave:	The sonar operates in the dual-head mode as the slave unit.

NOTE

For single-head systems, the operator MUST select OneHead. Any other selection will result in a ping rate reduction of as much as 50%.

3.10 Modes Menu

```
   Format: Rθ
 TestPtrn: OFF
 Sidescan: OFF
 Snippets: Uniform
 Projectr: Stick
 PtchStab: OFF
 RollStab: OFF
     MENU: Modes
```

The modes menu is accessible only through the BITE screen. Modes menu items are made available to allow the operator to integrate the SeaBat 8101 system into any specific survey vessel or platform.

3.10.1 Format

This selection controls the format/contents of each output profile data packet. There are currently two formats available. See Chapter 6, Interface Specification Document, for additional details.

Rθ:	R-Theta (range and beam angle) provides all soundings, their quality values, date/time, and the selected speed of sound.
RIθ:	RI-Theta (range, intensity, and beam angle) provides the same information as R-Theta with the addition of a 16-bit intensity value for each bottom detect sounding.

3.10.2 TestPtrn

This item allows the operator to select a test pattern for testing interfaces to a data acquisition system. The operator selection is either ON or OFF.

A flat seafloor is displayed with a block moving from beam 0 to the last beam, across the display. The seafloor is displayed at the widest part of the wedge and the block height is approximately 4% of that depth.

3.10.3 Sidescan

This menu item allows the operator to select the desired sidescan operating mode. <u>This menu is active only if the sonar has the Backscatter/Sidescan option installed</u>.

Off:	No sidescan data is output from the 81-P processor.
Full-Old:	Sidescan data is not compressed. All data points are used for the sidescan image. Note that this can result in a very large number of data points.
RMS-Old:	At longer ranges, sidescan data is compressed to 1024 samples for each side (port and starboard) using an RMS value process.
Average-Old:	At longer ranges, sidescan data is compressed to 1024 samples for each side (port and starboard) using an average value process.

Full-New:	New and Old are the same except that a lower noise beamforming technique is used.
RMS-New:	New and Old are the same except that a lower noise beamforming technique is used.
Average-New	New and Old are the same except that a lower noise beamforming technique is used.

See Chapter 4, paragraph 4.5.4, and Chapter 6, paragraph 6.3.9 for technical details of the sidescan process.

3.10.4 Snippets

The Snippets menu item* offers three settings:

Off:	Disables the Snippet mode and the sonar returns to its normal operating condition
Uniform:	Enables the Snippet mode and the sonar outputs Snippet data in the Uniform format
FlatBottm:	Enables the Snippet mode and the sonar outputs Snippet data in the Flat Bottom format

*The Snippets function is part of the Backscatter/Sidescan option for SeaBat 8101 and may not be present on some systems. See Paragraph 4.5.1 for additional information on the Snippets option.

A Snippet data sample contains amplitude data from the ‘footprint’ on the seabed illuminated by a single sonar ping. The number of Snippets in a swath is a function of the number of sonar beams. For a SeaBat 8101 150° system, this number is 101 (the Snippets mode is not currently available for the 210° system). The length of each Snippet depends on the operating mode (Uniform or Flat Bottom), the beam number, and depth.

In the Uniform mode, the length of each Snippet is roughly proportional to the range to the bottom detect point of any specific beam. The Uniform mode may be more useful when surveying a non-flat bottom or a bottom with numerous features.

In the Flat Bottom mode, the length of each Snippet is proportional to the size of any specific beam’s footprint on the bottom. There will be a greater range of variation between center and outer beams because the wider footprint of the outer beams results in longer Snippets.

The beam to beam concatenation of the Snippets from one ping usually results in 100% coverage of the seabed which is similar in spatial geometry to that obtained by a sidescan beam forming method. In most cases, the Flat Bottom mode will produce better coverage.

See Chapter 6, paragraph 6.3.10 for Snippet header and data formats.

3.10.5 Projectr

This menu item provides a means of selecting the type of installed projector and opening angles for the transmitted beams.

Stick:	Transmits via the installed stick projector.
SteerTest:	Reserved for maintenance testing.
Steer x.xº	Where x.xº will be 1.5º, 3.0º, 4.5º, and 6.0º. This item will be active only if a steerable projector is installed.
E-R:	Transmits via the installed Extended Range projector.
Main Array:	Transmits via the main ceramic array.

IMPORTANT

Always select the type of projector actually installed to avoid a conflict with Vessel Reference Point (VRP) calculations. Also, if the wrong type is projector is selected, the system may not transmit or transmit at a greatly reduced level.

3.10.6 PitchStab

Enables the operator to select the type of pitch stabilization desired.

Off:	Pitch stabilization is not used.
Stab:	Pitch is stabilized using the most recent value from the motion sensor.
Stab+Pred:	Pitch is stabilized using an extrapolation of recent history values from the motion sensor. This is the preferred operating condition.

3.10.7 RollStab

Roll stabilization is not currently provided in the SeaBat 8101.

3.11 BITE Screen

The small box in the upper left corner of the display is the BITE button. The purpose of the BITE button is two-fold.

- Provides a visual alert that the status of some part of the system has changed its operational characteristics.
- Allows one-click access to the BITE screen for diagnostic examination of the system.

The BITE button will always be one of the following colors:

Green:	Normal operation - OK
Yellow:	System operational - some levels out of compliance
Red:	System not operational - malfunction

A single-click of the BITE button changes the display to the diagnostic BITE screen. Status information text is presented in three colors:

White/Green:	Normal operation
Yellow:	Out of compliance/calibration
Red:	Malfunction

If a red indication is shown in the Receiver Gain or Phase Offset box, place the cursor on the item shown in red, and the receiver number and associated offset will be shown under the lower left corner of the selected box. As problem areas are corrected, the BITE button will change to green, assuming all other functions are working properly. Click the BITE button again to return to the sonar display.

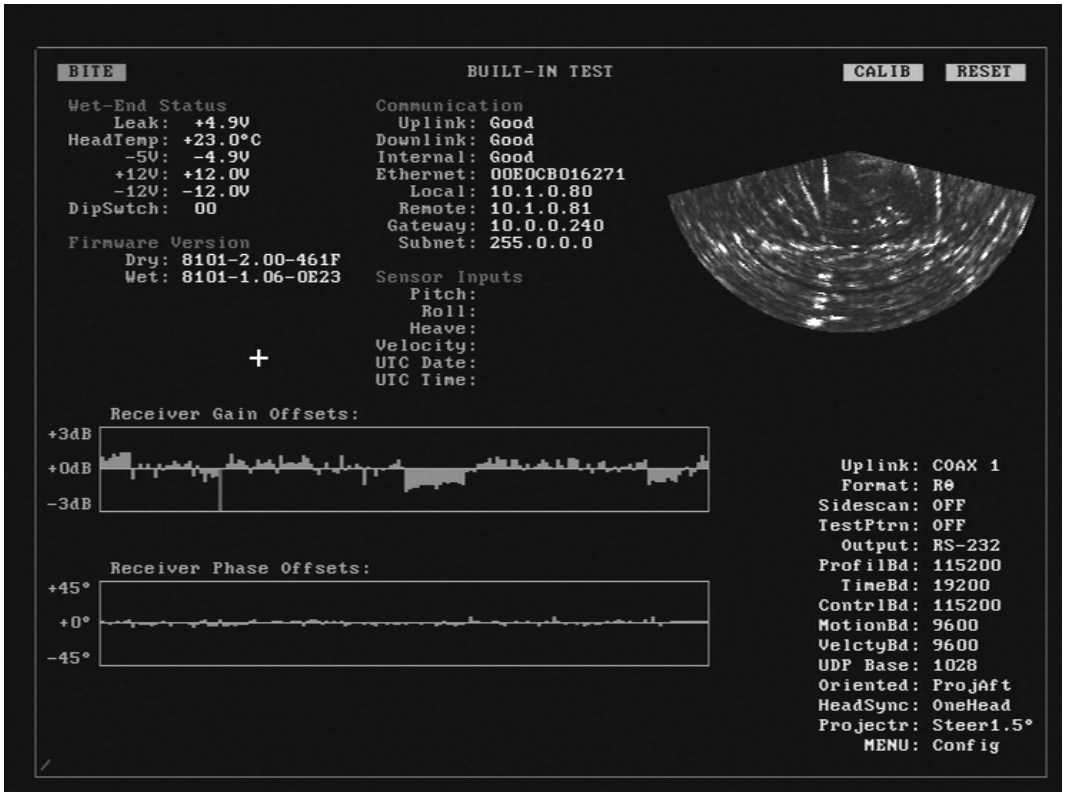

Figure 15, BITE Diagnostic System Information

NOTE

The four Operation menus, plus OFF, available at the Main Display are available in the BITE screen as well. Click on MENU to cycle through the menu selections. In addition, the sonar data wedge is displayed to allow the operator to monitor sonar operation while changing an item on either the Configuration or Modes menu.

3.11.1 CALIB Button

Calibration is performed automatically upon power-up. Calibration may also be performed at any time by clicking the CALIB Button. This initiates a process which calibrates the electronics associated with each of the ceramic elements that constitute the receiver array. A highly accurate tone generator in the sonar head injects a tone of known amplitude and phase into the receiver channels. This calibration signal is received, the processor generates a lookup table of both gain and phase offsets by comparing the received signal to that transmitted. All subsequent signals from that channel have these offsets applied to them before further processing. This compensates for minor inconsistencies in the analogue receiver channels.

NOTE

To ensure proper auto-calibration, do not power up, reboot, or calibrate the system when the Sonar Head is being deployed or retracted, as any mechanical noise may affect the measurements.

3.11.2 RESET Button

A single-click on the RESET Button reboots the firmware in the sonar processor and initiates a calibration routine.

3.11.3 Wet-End Status

This status block displays the status of monitored Sonar Head items.

Leak:	Shown as a voltage value, the leak sensor indicates the presence of water in the head. If the indicated value falls below 3.8V the BITE button will turn RED. The system should be shut OFF immediately and the Sonar Head removed from the water.
HeadTemp:	Shown in degrees C, this is the temperature inside the Sonar Head.
-5V:	The voltage shown is the measured value of the -5VDC power supply in the Sonar Head. The displayed value should be close to -5 volts.
+12V:	The voltage shown is the measured value of the +12VDC power supply in the Sonar Head. The displayed value should be close to +12 volts.
-12V:	The voltage shown is the measured value of the -12VDC power supply in the Sonar Head. The displayed value should be close to -12 volts.
DipSwitch:	This number is the HEX value of the sonar head configuration dip switch. This is a factory setting.

3.11.4 Communication

The Communication block indicates the status of system communication functions.

NOTE

If the status of either the Uplink, Downlink, is BAD, the BITE button will be RED and the system will be inoperable. Immediate steps must be taken to find the cause of the problem.

Uplink:	Indicates the status of the uplink from the Sonar Head to the Sonar Processor. The indication will be either Good or Bad.
Downlink:	Indicates the status of the downlink from the sonar Processor to the Sonar Head. The indication will be either Good or Bad.
Internal:	Indicates the status of the Sonar Processor internal self-test. The indication will be either Good or Bad.
Ethernet:	This is the Ethernet hardware address of the processor board within the Sonar Processor. The last six digits are the serial number of the board.
Local:	Operator Definable. This is the IP address of the Sonar Processor for Ethernet communication.
Remote:	Operator Definable. This is the IP address of the data collection computer
Gateway:	Operator Definable. This is the gateway IP address for Ethernet communication. If the Remote and Local are on different subnets, the gateway will be used.
Subnet:	Operator Definable. This is the local network's Subnet mask used for network communications.

To change addresses in the Communication block, simply place the cursor on the digit to be changed and increment, or decrement, by using the mouse buttons (depress the middle button to increase the rate of change).

3.11.5 Firmware Version

The firmware version number for both the Sonar Processor (Dry) and the Sonar Head (Wet) are displayed. Please have these numbers ready if it is necessary to contact RESON for technical support. During system power-on, the dry end checks the version of the wet end for compatibility. If necessary, the dry end automatically downloads the proper code to the wet end.

3.11.6 Sensor Inputs

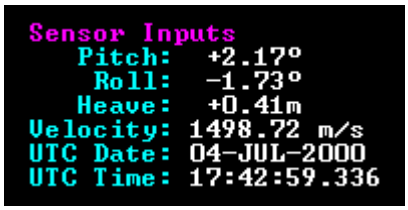

This block indicates the current input value from the remote sensors interfaced to the system. If a particular sensor is not installed, its value space will be blank. See Chapter 6 for additional details on port configuration.

Pitch:	The current pitch value in degrees measured by the motion sensor (if installed).
Roll:	The current roll value in degrees measured by the motion sensor (if installed).
Heave:	The current heave value in meters measured by the motion sensor (if installed).
Velocity:	The current sound velocity in meters per second measured by the velocimeter or CTD sensor (if installed).
UTC Date:	The current UTC date from an external date/time source (if installed).
UTC Time:	The current UTC time from an external date/time source (if installed).

Motion Sensor inputs for Pitch, Roll, and Heave are required for pitch stabilization and the use of dynamic depth gates.

The velocity of sound, at the face of the projector, is required for proper pitch stabilization and correct scaling of the sonar wedge in the Main Display screen (see Figure 11).

UTC date and time are required for accurate time stamping for bathymetry and sidescan output data. In the absence of a UTC input, the included latency value can be used in lieu of a time stamp.

3.11.7 Offset Graphs

The two Offset Graphs blocks represent the gain and phase uniformity of the receiving channels in the Sonar Head. Slight variations are normal. As the cursor moves within borders of a graph, the receiver channel number, board number, its offset value, and the average value appear just below the graph.

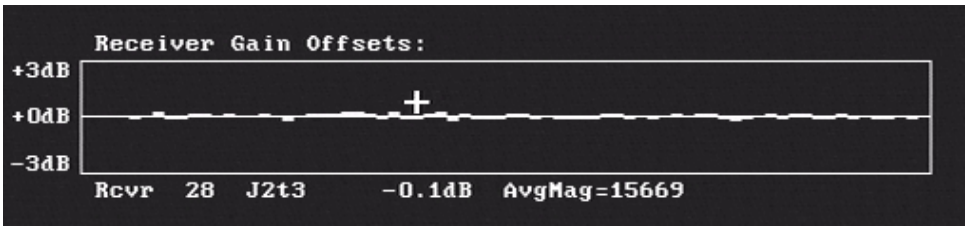

Figure 16, Receiver Gain Offsets

Receiver Gain Offsets:

Condition	Color	Value
Acceptable	Green	<±2.0dB
Marginal	Yellow	≥±2.0dB, <±3.5dB
Extreme	Red	>±3.5dB

Receiver Phase Offsets:

Condition	Color	Value
Acceptable	Green	<±30°
Marginal	Yellow	≥±30°, <±60°
Extreme	Red	>±60°

3.11.8 Ping Indicator

The ping indicator is a small red 'dash' at the lower left corner of the BITE screen which rotates 45° each time the transmitter pings. As ranges increase, the rotation rate will decrease.

3.12 System Ping Rate Values

To aid in the calculation of Sounding Density, the following table provides ping rates for the SeaBat 8101 system. Note: Sound Velocity = 1500 meters/sec, HeadSync = 1 Head, and MaxRate = 40 pings/sec.

Table 6, 8101 System Ping Rate Values

Range Scale	Ping Rate
3.5	40.00
5	40.00
7	40.00
10	40.00
15	40.00
20	35.63
25	28.63
30	23.92
35	20.55
40	18.01
50	14.44
75	9.65
100	7.24
125	5.80
150	4.84
175	4.15
200	3.63
250	2.90
300	2.42
350	2.08
400	1.82
480	1.51

NOTE

Not all SeaBat 8101 systems will have the same series of range scales as shown in Table 6.

3.13 Changing the Display Mode

To change the display mode, a 3-button mouse or trackball is required.

- Move the cursor to the farthest point possible at the upper left corner of the screen and hold it there.
- Press:
  Center and Right buttons for S-Video and Composite in NTSC format
  Center and Left buttons for S-Video and Composite in PAL format
  Left and Right buttons to return to S-VGA format

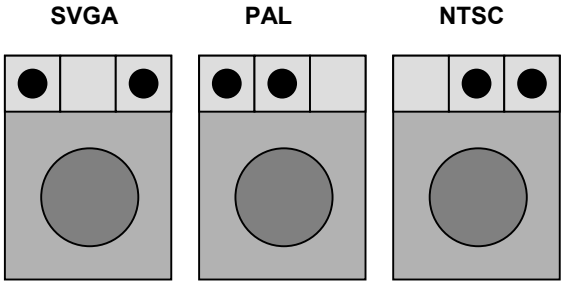

This page intentionally left blank.

Chapter 4 - Options and Upgrades

4.1 Introduction

This chapter provides descriptions of the various Options and Upgrades available for the SeaBat 8101 Multibeam Echosounder system.

The current option list is:

Table 7, SeaBat 8101, Current Options

Option 015	Yearly Upgrades for SeaBat Firmware
Option 017A	Extended Warranty Contract
Option 026	SeaBat Cable Length (non-standard)
Option 033A	Backscatter/Sidescan Upgrade
Option 034	Transducer Mounting Assemblies
Option 035	Fairing Set (Fore/Aft)
Option 036	Spares Kit
Option 037	Upgrade Sonar Head to Titanium
Option 038	Upgrade to 210 Degree Swath
Option 039F	Yearly Inspection and Servicing
Option 040	Upgrade Projector to Extended Range (ER)
Option 041	System Integration and Training
Option 043	Coax to Fiber Optic Interface Unit
Option 046	Analog Center Beam Output
Option 047	Upgrade to Switchable (Dual Mode)
Option 049	Increase Sonar Head Depth Rating
Option 051	24 VDC Power Supply for 81-P Processor
Option 057	Upgrade to Transmit Pitch Stabilization

A detailed description of each option is provided in following paragraphs. This list will be expanded and updated as new options are developed or existing options are changed. Contact RESON Sales for additional information and pricing.

4.2 Option 015, Yearly Upgrades for SeaBat Firmware

This option provides the user with all firmware upgrades that are released in a full year. This is typically purchased at the time of the initial order for the 2nd and 3rd year period.

4.3 Option 017, Extended Warranty Contract

All SeaBat systems are provided with a standard 12 month warranty. This option provides the user with the ability to purchase additional yearly support.

4.4 Option 026, SeaBat Cables

This option provides the ability to purchase additional cables or non-standard length cables, other than those provided with each system.

4.5 Option 033, Upgrade to Sidescan Capability

This option adds two types of backscatter processing capability (Snippets and MBES Sidescan) to the SeaBat 8101 Multibeam Echosounder system.

4.5.1 Introduction

The Backscatter/sidescan Upgrade, Option 033, can be installed on any SeaBat 8101 Multibeam Echo Sounder. Without degrading any of the traditional survey capabilities, a sidescan swath is measured and output from the topside sonar processor. The SeaBat system using either Snippets or MBES Sidescan capability is ideal for pipeline inspection operations and general site surveys where co-location using both bathymetry and sidescan is desirable.

The Option 033 upgrade includes changes to the topside processor to enable the processing of both types of data, which is then made available from the rear of the processor in digital form (Ethernet UDP protocol). The upgrade does not include a method for Snippets or Sidescan data to be displayed; this needs to provided additionally.

4.5.2 Snippets Imagery Data

A Snippet is the series of amplitude values in the signal reflected from a beam's footprint on the seafloor. One Snippet will be produced for each beam for each sonar ping (see Figure 17). The length of each Snippet will vary as a function of the individual beam angle, seafloor depth, and the Snippets operating mode. If the Snippets data for each swath is concatenated, with each individual beam centered at its corresponding bottom detect point (footprint) location, the combined series will provide a result similar to slant range corrected sidescan imagery (see Figure 18). In most cases, this will provide 100% coverage of the seafloor.

See paragraph 6.3.10 for additional information on Snippets data format.

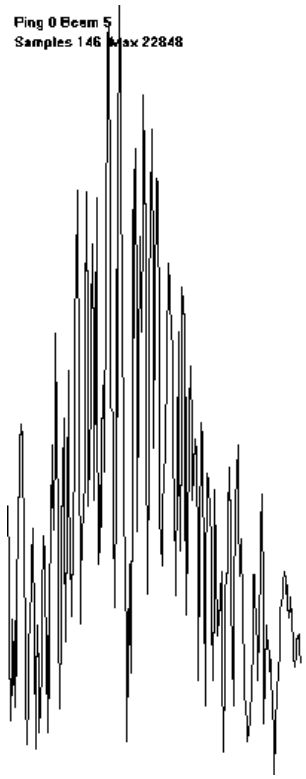

Figure 17. Snippet Data Sample

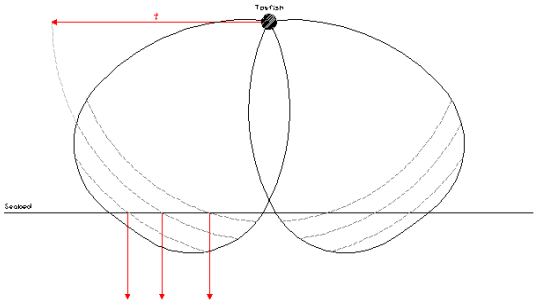

MBES Scan Backscatter Sampling

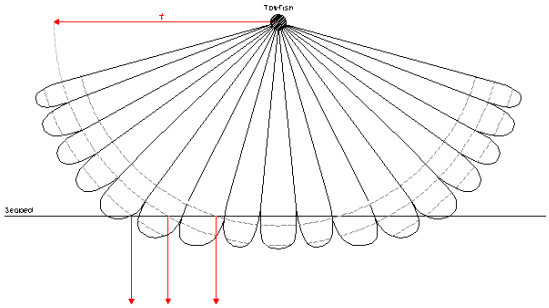

Snippets Backscatter Sampling

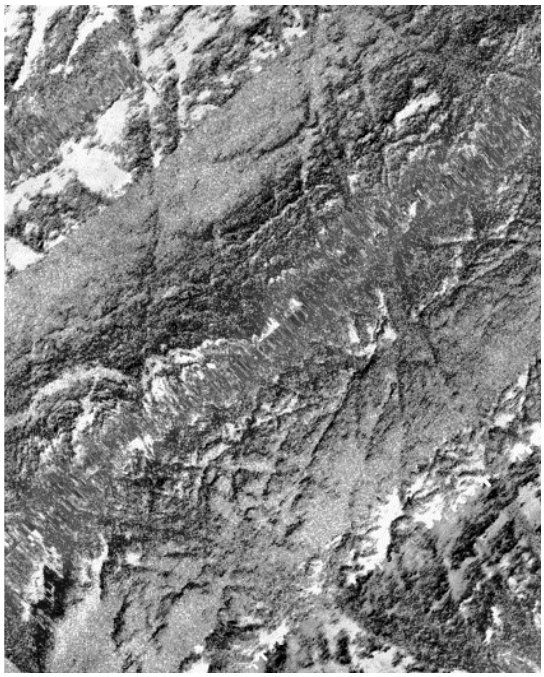

MBES Sidescan Imagery

Snippets Imagery

Figure 18, Snippets Data Comparison

The Snippets option will satisfy the USGS survey requirements for high resolution backscatter data. With Snippets and the proper processing software, surveyors have additional information to allow better classification of bottom properties.

4.5.3 Sidescan Imagery Data

Sidescan forms an image of the sea floor which can be used to locate and identify features and bottom conditions. Each sonar ping is used to generate a line of data. Each line contains a series of amplitudes representing the signal return vs. time or range. A higher amplitude indicates a strong reflector, which may be ei-

ther the near side of a target or a more reflective surface. Low amplitudes may be the shadow of a feature or a less-reflective surface. When a series of these lines are combined and displayed, as the vessel moves along the track, a two-dimensional image is formed which provides a detailed picture of the bottom along either side of the vessel.

The sidescan data is output as an array of amplitude values which represent the amplitudes for each sample cell in the beam from a single ping. The sidescan beam (see Figure 19) has the same 1.5º along-track beamwidth as the bathymetry beam, but the across- track range resolution is determined by the sampling rate rather than the beamwidth. The result is that each amplitude value represents an area 1.5º wide by 5 centimeters. The sidescan beam is designed with a much wider beamwidth than the bathymetry beams so that each beam has a field of view from very near the vessel out to the maximum slant range of the sonar.

Once the sidescan data is measured, it is transferred to the sonar processor where it is processed separately from the bathymetry data to ensure data integrity. The final sidescan data is output from the SeaBat sonar processor via an Ethernet UDP protocol.

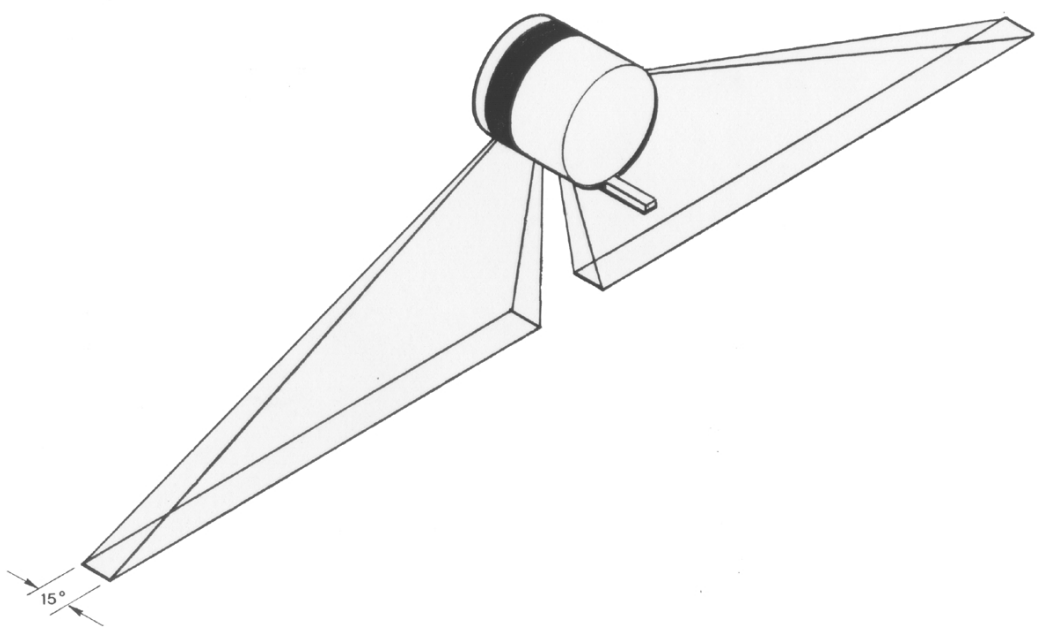

Figure 19, Sidescan Beam Geometry

Sidescan cannot be used to accurately measure depths, but it can provide a more detailed picture of the sea floor. This image can be used, together with bathymetry, to identify features and to help ensure that the survey does not miss any small, but significant targets.

The survey procedures for the collection of multibeam bathymetry and sidescan data are different. For multibeam bathymetry, the transducer should ideally be located high above the seafloor so a wide swath can be measured. For best sidescan measurements, the transducer should ideally be close to the seafloor, looking out sideways, measuring the reflection from a low incident angle. Because of these varying survey procedures, a decision should be made as to the requirements of the survey, and one of the techniques compromised accordingly. Remember that the SeaBat 8101 has a 150 degree field of view and surveying very close to the bottom will reduce the coverage area.

4.5.4 Technical Details

The bathymetry and sidescan data are independent, both in the beamforming process and in how the output data are used. A separate set of processing logic is used for sidescan.

- **Sidescan beamforming ("old") -** The sidescan beams are formed by using a process similar to that used for the bathymetry beams. The signals from each element used are amplified, weighted and summed. The difference between bathymetry and sidescan beamforming is that the phase adjustment for each element is not done. With the circular receive array, this results in a receive beam width covering approximately the same angular sector as the elements used to form the beam. The imagery information is contained in the amplitude data.
- **Sidescan beamforming ("new") -** The "new" process combines one half of the bathymetry beams (beams 0 to 49 for port and beams 51 to 100 for starboard) into two sidescan beams. The process combines adjacent pairs of beams by averaging and then combines the averages by selecting the brightest points from the averaged beams. The combination process uses peak-detect determination. The "new" process yields a less noisy output.
- **Sidescan data output -** The array of intensity values is a series of amplitudes, one for each sample interval for each sidescan beam. The SeaBat 8101's sampling rate of 5000 samples per second provides approximately one measurement for every fifteen (15) centimeters of range. The number of intensity values reported in a sidescan packet is a function of range: at a 300 meter range setting, using a 1500 meter per second sound velocity, the packet will have 2000 values for each sidescan beam; at a 1000 meter range, 6666 values would be output per sidescan beam. The data are output in a series of binary packets via a network connection. These packets are separate from the bathymetry packets, although they are output over the same network link. The receiving program must accept the packet over the network and properly interpret it. The packet includes the time of the ping used to generate the data (only if a UTC input is provided), which beam the data is from, an array of sidescan data values and other supporting information.

See paragraphs 6.3.9 and 6.3.9.1 for additional details of the sidescan output format.

4.5.5 Upgrade Procedure

New SeaBat 8101 Systems can be ordered from the factory with Option 033 installed; existing systems must be returned to RESON for upgrade to the sonar processor. Contact RESON Sales for additional information regarding the SideScan Option.

4.5.6 Option 033 Specifications

Table 8, Option 033 Specifications

Operating Frequency	240 kHz
Swath Widths	Double the range (maximum of 960 meters)
Range Resolution	5 cm
Cross-Track Beamwidths	Receive: 67.2º for each channel (1 port, 1 starboard) (62.4º for 210º systems) Transmit: 170º
Along-Track Beamwidths	Receive: 15 º Transmit: 1.5º
Receive Beam Center	43.5º to either side of nadir (45.8º for 210º systems)
Update Rate	Up to 40 times per second
Output Format	Digital - Ethernet - UDP Protocol

4.6 Option 034, Transducer Mounting Assemblies

RESON offers several mounting configurations for over-the-side, fixed hull mounting, and ROV installations. See the drawings in Chapter 9 for details.

4.7 Option 035, Fairing Set (Fore/Aft)

This option provides the hardware assembly for a hydro-dynamic fairing at the forward and aft ends of the Sonar Head. Figure 21 and Figure 22, show a fairing set for a sonar head equipped with a stick projector. A sonar head with an ER projector uses a similar configuration with the exception of a cut-out in the aft fairing to accommodate the projector. Note that when an ER projector is used, the stick projector and projector guard are not used. See also Chapter 9, Drawing 10723 for additional details.

Figure 20, Fairing Set, Forward View

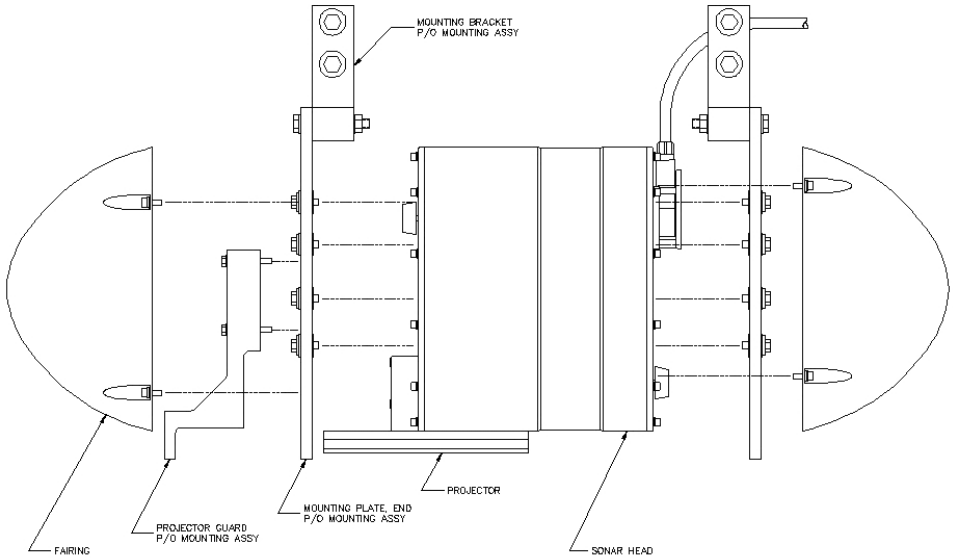

Figure 21, Fairing Set, Exploded View

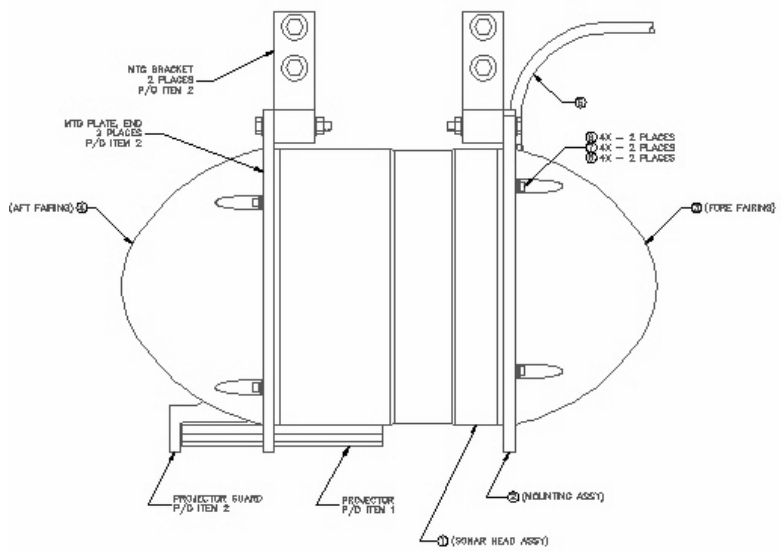

Figure 22, Fairing Set, Assembled

4.8 Option 036, Spares Kit

Spares Kits are available for the several versions of the SeaBat 8101 systems. RESON reserves the right to sell spares kits only to customers who have had maintenance personnel pass a RESON Training Course on the applicable system. A typical spares kit will contain one of each of the following:

- Receiver board
- Power supply board
- O-ring spares kit
- Anode spares kit
- Lid screws spares kit

If a spares kit is required, contact RESON and provide the following facts:

- The material of the sonar head (Aluminum or Titanium)
- The depth rating of the sonar head
- The serial number of the sonar head

4.9 Option 037, Upgrade Sonar Head to Titanium

The SeaBat 8101 Sonar Head housing is available in two different types of material. The choice of material will depend upon desired working depth and the type of installation (permanent or semi-permanent).

- Hard anodized aluminum - This is the standard material for the head and is suitable for temporary vessel and ROV installations, but not for long-term stationary deployment.
- Titanium - This is the optional material and is intended for long-term or permanent installations such as, fixed hull mounting or locations where access for maintenance is difficult.

The housing consists of the main cylindrical body and the top and bottom lids. When upgrading from Aluminum to Titanium, the projector's body material must be matched to the material of the sonar head housing. See Table 4 for relative weight differences for a sonar head with a stick projector. This upgrade can not be accomplished in the field.

4.10 Option 038, Upgrade to 210 Degree Swath

The basic SeaBat 8101 system is configured to measure a 150º X1.5º swath. Option 038 increases the swath width to 210º X 1.5º by adding additional electronics to the sonar head, and processing capabilities and firmware to the sonar processor. This increased swath width provides the system with the ability to map up to the water's edge at breakwaters and under piers. Figure 23 shows the increased (210º) coverage obtained by using the standard stick projector with the added receiving capability.

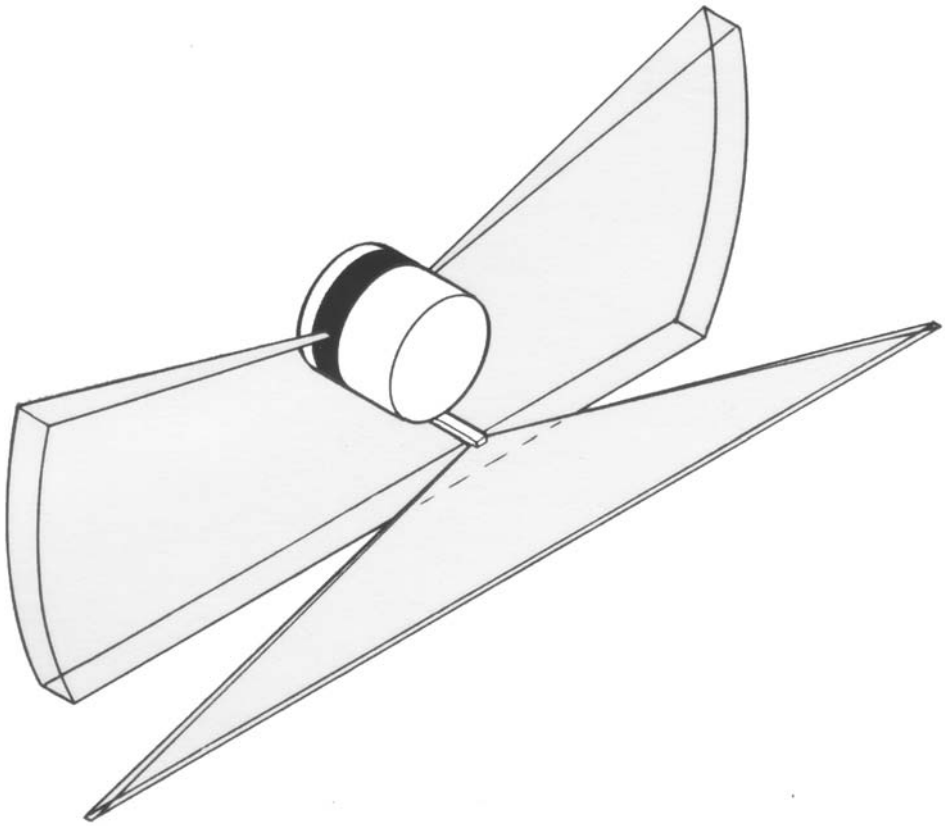

Figure 23, Standard (foreground) and Wide Swaths

The standard 150 degree 8101 system Beamforms returning bottom detect information into 101 beams spaced 1.5º center to center. The optional 210 degree system produces 141 beams with the same 1.5º spacing. The benefits of the larger swath include:

- Greater swath width when surveying very shallow water.
- The ability to "see" above the level of the head which is useful in surveying breakwaters and under piers.
- Less data loss due to rolling of the survey vessel.

4.10.1 Upgrade Procedure

New SeaBat 8101 system can be ordered from the factory with Option 038 installed. Existing systems must be returned to RESON for hardware upgrades to the sonar head and firmware upgrades to the sonar processor.

4.11 Option 039F, Yearly Inspection and Servicing

The SeaBat 8101 MBES system is a ruggedized solid-state system that, unless abused, should not require re-calibration or general servicing during its lifetime. However, for those customers who undertake the collection of bathymetry data intended for publication of nautical charts, there is the need for factory verification of performance and a yearly servicing. Option 039 is provided for this requirement. The following tasks are performed as part of this option:

- Visual inspection of all system components
- Installation of new anodes
- Open both the head and processor and:
  Remove, test, and retune receiver boards
  Remove and test power supplies
  Remove, test, and retune transmitter
- Bench test complete system
- Tank/water test system and verify source level
- Burn-in system for a minimum of 24 hours

If any parts are found to require replacement, an estimate of cost to repair will be provided to the customer prior to actual replacement.

4.12 Option 040, Upgrade to Extended Range (ER) Projector

The standard SeaBat 8101 system, when used for bathymetric operations, has been designed to track the seafloor to a maximum depth of 320 meters. When equipped with an Extended Range (ER) projector, the maximum depth increases to 450 meters.

4.12.1 Upgrade Procedure

New SeaBat 8101 systems can be ordered from the factory with Option 040 installed. Existing systems must be returned to RESON for the projector installation, sonar head power supply upgrade, and source level tests.

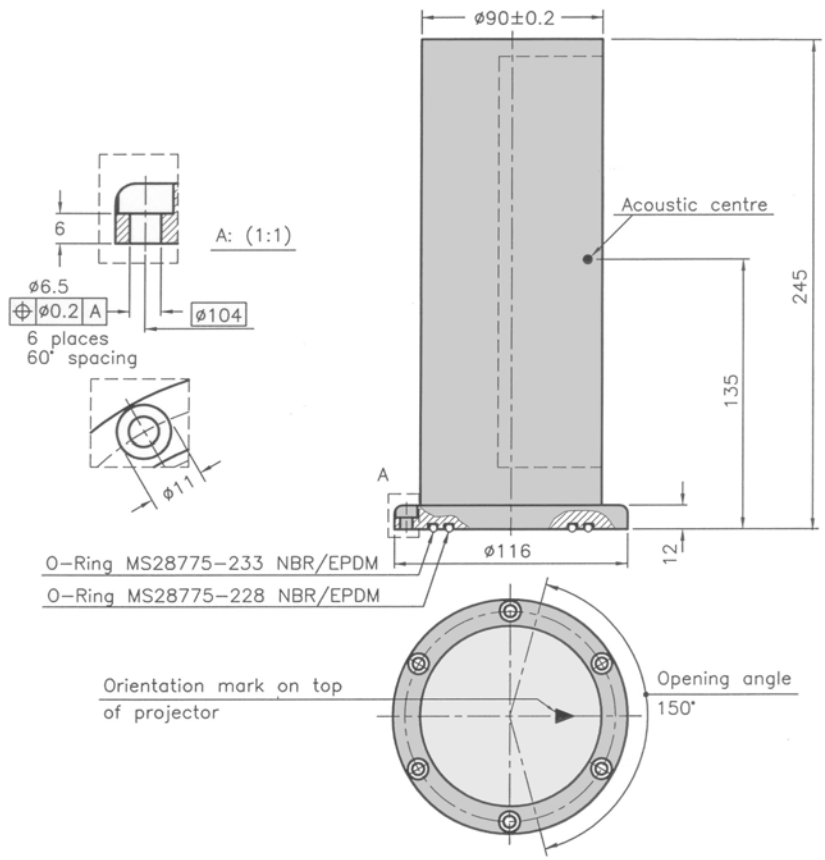

Figure 24, Extended Range (ER) Projector

NOTE

The acoustic center shown in Figure 24 is used for factory projector testing only. For systems equipped with an ER Projector, the acoustic center of the head should be determined by the measurements shown in Figure 8. See also paragraph 3.10.5 for projector selection.

Several different versions of the ER projector are available. The differences are related to Aluminum or Titanium frames and depth rating of the parent sonar head. Contact RESON for assistance in selecting the proper ER projector for the installed system.

4.13 Option 041, System Integration and Training

This option provides services to SeaBat Multibeam users for on-site installation and integration with a bathymetric data acquisition system, calibration, and training of operating personnel in the use of the complete system.

4.14 Option 043, Coax to Fiber-Optic Interface Unit

4.14.1 Introduction

The SeaBat 8101 Sonar Head uplinks data to the Sonar Processor via a co-axial cable embedded in the standard 25 meter head to processor cable. This length can be increased to a maximum of 150 meters by making compensating circuit adjustments in the Sonar Processor. Option 043 allows the use of a fiber-optic cable which provides a far greater length. Fiber-optic interfaces are typically used with ROV installations where the head to processor cable is first terminated on the vehicle.

This option requires no modification to the sonar head but does require modification to the circuitry of the sonar processor. In addition, the sonar head to sonar processor cable will require a change in termination dictated by the specifics of the customer's installation.

For systems that already have Option 043 modifications to the sonar processor, the co-ax to fiber-optic interface unit alone can be procured as Option 043A.

4.14.2 Installation

The fiber optic interface unit (Figure 25) consists of a coax to fiber converter box. The standard head to processor cable must be reterminated within the ROV. The normal coaxial uplink is redirected to the coax to fiber-optic interface unit which will be located in the general vicinity of the sonar head on the ROV. The optical output of the interface unit must be coupled to the fiber-optic cable in the ROV's umbilical cable. At the topside end, the fiber-optic cable is sent directly to either the FO1 or FO2 connectors on the rear panel of the sonar processor. The 8101 system must be configured to look for the uplink at the selected fiber-optic port. See Paragraph 3.9.1, for information on selecting the correct uplink port.

4.14.3 Application

Due to the high frequency digital uplink employed by the SeaBat 81xx series systems, uplink cable length is generally limited to 150 meters of coaxial cable. For installations where cable lengths in excess of this length are required, such as ROV installations, Option 043 should be used.

The Coax to Fiber-Optic Interface Unit is designed to fit into an ROV junction box. The unit requires 24 VDC operating power which must be supplied from the ROV. Analog co-axial input is made via a standard 75 ohm BNC connector and the optical output uses as ST type 62.5/125 nm fiber. See Table 9 and Table 10 for additional specifications.

Figure 25, Fiber-Optic Interface Unit

Table 9, Option 043 Specifications

Parameter	Symbol	Min	Max	Unit
Data Rate (NRZ encoding)	DR	10	125	Mbits/sec
Average Optical Power (BOL)*	Po	14.1 (-18.5)	39.8 (-14.0)	µW (dBm)
Average Optical Output (EOL)**	Po	10.0 (-20.0)	28.2 (15.5)	µW (dBm)
Optical Wavelength (center)	λc	1305	1380	nm
Spectral Width (FWHM)	Δλ	--	160	nm

* Values given are at BOL and from 0º C to 70º C ambient
** Measured average power coupled into 0.29NA, 62.5/125 µm fiber.
Includes 1.5 dB end-of-life (EOL)

Table 10, Option 043 Connectors

Power (bulkhead connector)	ConXall 7282-SG-300
Power (mating connector - supplied with 12 inch pig-tail as part of this option)	ConXall 6282-2PG-3xx Pin 1 - 20-70 VDC, 100ma @ 24 VDC Pin 2 - Return
Co-ax	BNC, 75 Ohms Center pin - Signal
Fiber	ST type, 62.5/125mm fiber

4.14.4 Upgrade Procedure

New SeaBat 8101 systems can be ordered from the factory with Option 043 installed. Existing sonar processors must be returned to RESON for installation of this upgrade.

4.15 Option 046, Analog Center Beam Output

4.15.1 Introduction

The sonar processor outputs the center beam in analog format, at the I Out, Q Out, and Trig In/Out BNC connectors at the lower left corner of the rear panel.

Table 11, Option 046 Specifications

Connector	Signal	Description
I Out	Center Beam Magnitude	0.0V to =3.0V unloaded Output Imp. = 1000 ohm, 4700 pF 0.0V = zero signal, +3.0V = maximum signal This is a detected signal; carrier has been removed
Q Out	Center Beam Phase	-3.0V to +3.0V unloaded Output Imp. = 1000 ohm, 4700 pF Relative angular offset from center of beam to target
Trig	Range = 0 Reference Pulse	0.0V to +3.5V Output Imp. = 1000 Ohm, 4700 pF 67µs pulse, indicates range = 0

4.15.2 Upgrade Procedure

New SeaBat 8101 systems can be ordered from the factory with Option 046 installed. Existing sonar processors must be returned to RESON for installation of this upgrade.

4.16 Option 047, Upgrade to SeaBat 8101S

This option allows the operator to switch between two different SeaBat 8101 operating modes. These modes can be bathymetry or forward looking sonar (FLS) such as the SeaBat 8102, or dual bathymetry using different beam geometries. When an 8101 system is operating in the FLS mode, the sonar head transmits and receives through the hydrophone array. Once an 8101 system has been upgraded with option 047, it is referred to as an "S" version.

The upgrade process requires changes to the sonar head electronics and firmware changes to the sonar processor. Both units must be returned to RESON for the installation of this upgrade.

4.17 Option 049, Increase Sonar Head Depth Rating

The standard SeaBat 8101 system is designed with an aluminum sonar head with a depth rating of 120 meters. This material and depth rating is ideal for over-the-side installations on surface vessels. For those customers who work at deeper depths with ROV or UUV installations, Option 049 provides increased depth capability and a choice of sonar head material.

An aluminum head can be upgraded to a maximum depth rating of 1500 meters (this requires the installation of an ER projector). For depths greater than 1500 meters, an upgrade to a titanium head is required.

A titanium head can be upgraded to a maximum depth rating of 3000 meters (this requires the installation of an oil-filled ER projector).

Contact RESON for additional details on the particular upgrade applicable to a customer's existing system.

4.18 Option 051, 24 VDC Power Supply for 81-P Processor

A standard SeaBat 81-P sonar processor uses auto-switching power supplies configured for 90 to 260 VAC. Option 051 provides the ability to use a DC power source such as two, or more, 12 VDC batteries on a small survey vessel. With this option installed, both AC power supply modules in the processor are replaced with two DC-to-DC converters which will function with an input voltage range of 18 to 72 VDC. At a nominal 24 DCV, the system requires a maximum of 240 watts. The sonar processor must be returned to RESON for the installation of this upgrade.

4.19 Option 057, Upgrade to Transmit Pitch Stabilization

This option allows the SeaBat 8101 system to maintain a vertical transmit beam when pitching. An external motion sensor's pitch value is required by the sonar processor to implement the correction.

Figure 26 B illustrates the maintenance of a vertical transmit beam with up and down pitch angles of 12°. Pitch correction is limited to ±12°. However, if the pitch angle exceeds this value, the transmit beam's vertical angle will still be corrected, but only to the 12° limit. Figure 26 C shows only a 5° beam displacement aft for a total downward pitch of 17°. Conversely, an upward pitch of 17° will result in a forward beam displacement of only 5°.

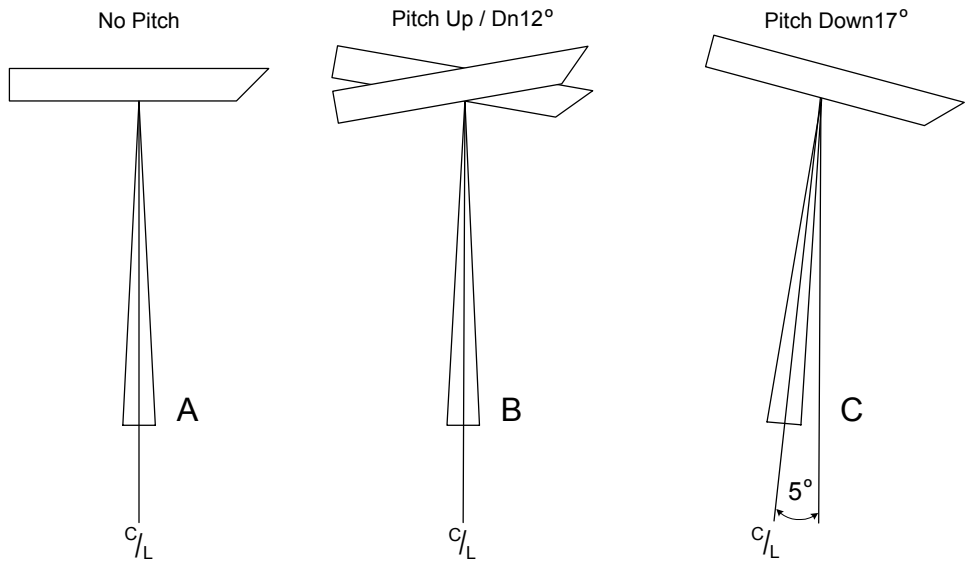

Figure 26, Transmit Pitch Stabilization

The pitch stabilization function employs a prediction algorithm to compensate for the motion sensor data transmission time and setup time required in the sonar head. Typically, pitch values are predicted approximately 60ms in advance.

Option 057 requires the installation of a replacement projector and additional printed circuit boards in the sonar head. The sonar head must be returned to RESON for this upgrade. If, however, the customer's schedule prohibits such a return, the upgrade can be accomplished in the field by a RESON engineer. In addition, a motion sensor must be connected to Serial Port 3 at the rear of the Sonar Processor. See Chapter 6, Paragraph 6.2.1.3 for details of this port.

Chapter 5 - Glossary of Terms

5.1 Introduction

The following glossary is provided to assist the reader in a more complete understanding of the technical terms used in this manual.

5.2 Glossary

AC	Alternating Current
ADC	Analog-to-Digital Converter
Array	Piezoelectric Ceramic elements arranged in a series/parallel configuration.
CPU	Central Processing Unit - the processor, or micro-processor in a computer
CTD	Salinity Temperature and Depth sensor (sometimes used in place of SVP or SSVP).
DC	Direct Current
DAC	Digital-to-Analog Converter
DAC	Data Acquisition Computer
Downlink	Serial data stream sent 'down' from the Sonar Processor to the Sonar Head
DRAM	Dynamic Random Access Memory
DSP	Digital Signal Processor
DSPRAM	Digital Signal Processor Random Access Memory
Ethernet	Shipboard, or platform, Local Area Network (LAN) for the distribution of digital data.
FPGA	Field Programmable Gate Array
Hydrophone	The unit of the Sonar Head that receives the acoustic energy reflected from the seafloor (see receiving array)
LAN	Local Area Network (see Ethernet)
Mains	The source of primary operating power for the SeaBat 8101 system (either 120 or 240 VAC)
MBES	Multibeam Echosounder
MRU	Motion Reference Unit
PC	Personal Computer
Profile	The bottom detected ranges within each swath
Projector	The unit of the Sonar Head that transmits acoustic energy into the water (see transmit array)
PROM	Programmable Read Only Memory
Receiving Array	See Hydrophone

RGB	Red-Green-Blue - the primary colors used in a color video display
ROV	Remotely Operated Vehicle
SDTRAM	Sonar Data Transfer Random Access Memory
S-VGA	Super Video Graphics Adapter
SVP	Sound Velocity Profile, or Profiler
SSVP	A Surface Sound Velocity Profile, or Profiler, functions in the same fashion as the SVP except that it is used exclusively to determine sound velocity at a local position (usually at the hydrophone face)
SYNC	Synchronize or Synchronization
Swath	The area of the seafloor illuminated by a single MBES System "ping"
TBD	To Be Determined
Transceiver	Transmitter and Receiver combination
Transmit Array	See Projector
TVG	Time Variable Gain control intended to vary the gain of an amplifier over a pre-determined time period. Usually from a low gain state to high gain.
TWEAKRAM	Tweak Random Access Memory - unique description for RESON products - stores gain and phase correction coefficients and uplink status messages.
UDP	User Datagram Protocol
Uplink	Serial data stream or digitized multiplexed data sent 'up' from the Sonar Head to the Sonar Processor
UTC	Coordinated Universal Time (UTC) is the international time standard. It is the current term for what was commonly referred to as Greenwich Meridian Time (GMT)
UUV	Unmanned Underwater Vehicle
VAC	The Voltage of an Alternating Current circuit
VGA	Video Graphics Adapter
VRAM	Video Random Access Memory
VRP	Vessel Reference Point

Chapter 6 - Interface Specification Document

6.1 Introduction

This document is comprised of multiple sections, each describing a specific interface and its unique characteristics.

The SeaBat 81-P Processor rear panel is the connection point for the data communication interface. There are two primary means of communicating with the processor unit. The first is via the Network port that is used for transmitting Bathymetric or Sidescan data to the Data Acquisition System. The second is via the serial ports that are assigned different tasks and data. This document will cover six of the rear panel ports. The network interface can only use one port at a time.

1. RS-232 Serial Port 1 – IN: Time Stamp, OUT: Bathy Data
2. RS-232 Serial Port 2 – IN: Command Messages, OUT: Command Acknowledgments
3. RS-232 Serial Port 3 – IN: Motion Sensor Data, OUT: None
4. Ethernet Port (10 Base T): - IN: Command Messages / Firmware download, OUT: Bathy Data / Sidescan
5. Downlink 1 – IN: Sound Velocity Data OUT: Downlink Head 1
6. Ethernet Port (10 Base 2): - IN: Command Messages / Firmware download, OUT: Bathy Data / Sidescan. Use either 4 or 6, do not use both at the same time.

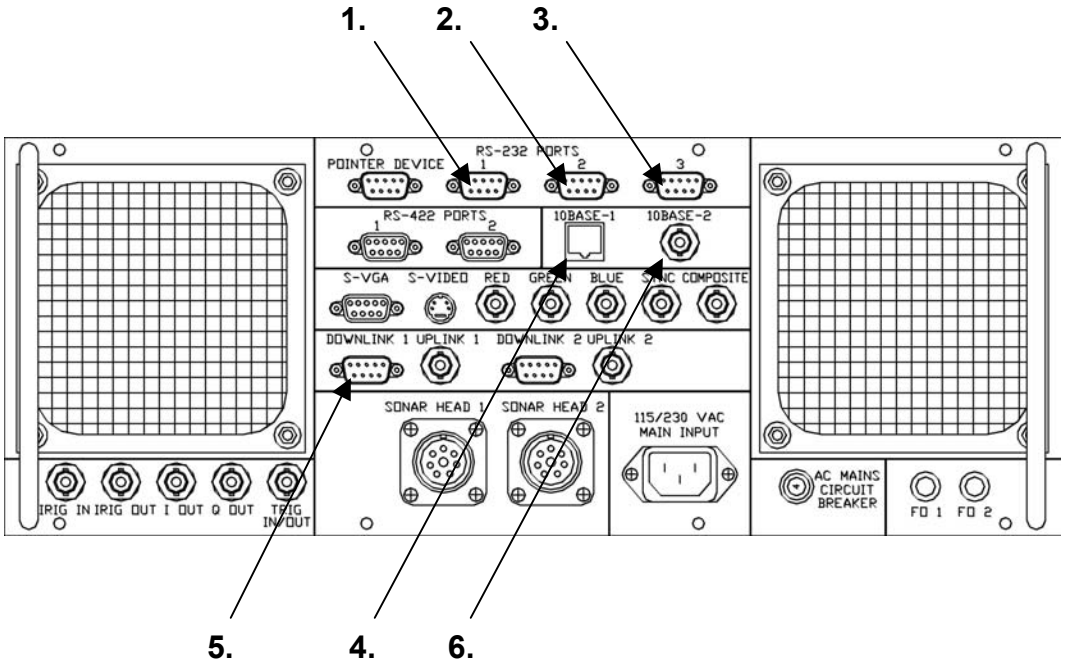

6.2 Hardware Interface Settings

Each interface has an individual setting and is dedicated to specific tasks.

6.2.1 Serial Ports

A single serial port can handle different I/O speeds. E.g., Port 1 Out – 9600; In – 19200. A NULL Modem RS-232 (9-Pin D-Sub) cable should have the following configuration:

Pin	I/O	Pin
1 (Not Used)		1 (Not Used)
2 (RX, Receive Data)	<	3 (TX, Transmit Data)
3 (TX, Transmit Data)	>	2 (RX, Receive Data)
4 (DTR, Data Terminal Ready)	>	6 (DSR, Data Set Ready)
5 (GND, Signal Ground)		5 (GND, Signal Ground)
6 (DSR, Data Set Ready)	<	4 (DTR, Data Terminal Ready)
7 (RTS, Request To Send)	>	8 (CTS, Clear To Send)
8 (CTS, Clear To Send)	<	7 (RTS, Request To Send)
9 (Not Used)		9 (Not Used)

Serial interface cables must not be longer than 50 m.

6.2.1.1 Serial Port 1

Port 1 is used for sending Bathymetric and receiving Time Stamp data.

Description	Setting
Connector Label	RS-232 Port 1
Baud Rate IN	1200, 2400, 4800, 9600, 19200, 38400, 57600 or 115200
Baud Rate OUT	1200, 2400, 4800, 9600, 19200, 38400, 57600 or 115200
Data Bits	8
Parity	None
Stop Bits	1

6.2.1.2 Serial Port 2

Port 2 is used for receiving and replying to command messages.

Description	Setting
Connector Label	RS-232 Port 2
Baud Rate IN	1200, 2400, 4800, 9600, 19200, 38400, 57600 or 115200
Baud Rate OUT	1200, 2400, 4800, 9600, 19200, 38400, 57600 or 115200
Data Bits	8
Parity	None
Stop Bits	1

6.2.1.3 Serial Port 3

Port 3 is used for collecting Motion Sensor Data. The Processor unit supports four different Motion Sensors, TSS DMS-05, TSS 335B, TSS 332B and Seatex MRU5.

Description	Setting
Connector Label	RS-232 Port 3
Baud Rate IN	1200, 2400, 4800, 9600, 19200, 38400, 57600 or 115200
Baud Rate OUT	N/A
Data Bits	8
Parity	None
Stop Bits	1

6.2.1.4 Downlink 1

Port 4 is used for collecting CTD Data.

Description	Setting
Connector Label	Downlink 1
Baud Rate IN	1200, 2400, 4800, 9600, 19200, 38400, 57600 or 115200
Baud Rate OUT	19200
Data Bits	8
Parity	None
Stop Bits	1

6.2.1.5 Ethernet

Select either 10 Base T (RJ45 connector) or 10 Base 2 (BNC connector) for network communication.

- 10 Base T – Use an Unshielded Twisted Pair Category 5 Cable, no more than 100 m in length, with an RJ45 connector. When connecting the processor unit directly to a PC use a cross over cable. Use a straight through cable when connecting to a HUB. To create a Straight-Through or a Cross-Over Cable use drawings below:

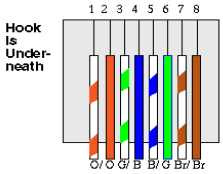

STRAIGHT-THROUGH

Connector 1	Pin	Connector 2
White/Orange	1	White/Orange
Orange	2	Orange
White/Green	3	White/Green
Blue	4	Blue
White/Blue	5	White/Blue
Green	6	Green
White/Brown	7	White/Brown
Brown	8	Brown

The Cross-Over wires differ from the Straight-Through according to the following picture / table:

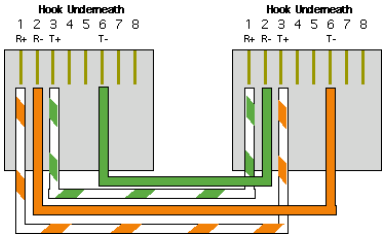

CROSS-OVER

Connector 1	Pin	Connector 2
White/Orange	1	White/Green
Orange	2	Green
White/Green	3	White/Orange
Blue	4	Blue
White/Blue	5	White/Blue
Green	6	Orange
White/Brown	7	White/Brown
Brown	8	Brown

The following illustrations describe the different cable configurations.

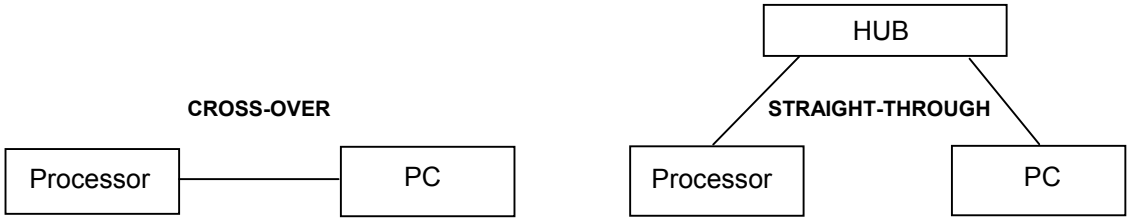

- 10 Base 2 – Use an RG-58 Cable (Coax) no more than 150 m with T-Shaped BNC connectors. Create a Bus Topology network with Terminators at the end of the cable.

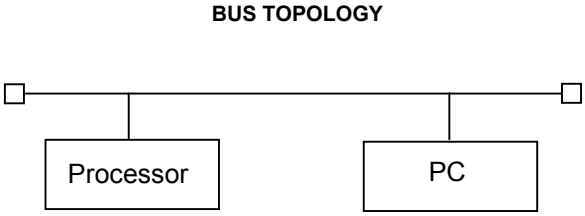

6.3 Messages and Data Format

Messages and Data are based on certain structures. Each structure will be described in detail below.

NOTE

Some messages are applicable only to bathymetric systems and NOT applicable to Forward Looking Sonar (FLS) systems. Those messages will contain the words (Bathymetric Systems Only).

6.3.1 Command Messages

All Command Messages are based on ASCII strings and build on the following syntax.

A Command Message: "*<TYPE>,PARAM1,PARAM2, …<CR><LF>"

Where:

Field	Description
*	Start of Message (Asterix)
TYPE	Message Type
PARAMxxx	Parameters for the Message
<CR><LF>	Carriage Return, Line Feed

There are three different replies on a Command Message followed by <CR> and <LF>

Example:

Field	Description
Reply String	Reply String
OK	OK Message
NG	No Good Message

Example:

- Sent: *RANG,100<CR><LF>
- The Reply (RS-232 only): OK<CR><LF>

6.3.1.1 Automatic Gain Messaage

- DESCRIPTION:
  This message controls the automatic gain in the 81-P processor.
- SYNTAX:
  *AGAN,N<CR><LF>
- PARAMETERS:
  N – Automatic gain level. 0 – Off, 1 – 10 automatic gain levels.
- EXAMPLE:
  *AGAN,1<CR><LF>
  This example turns automatic gain on, if it was off, and sets out the threshold 1.

6.3.1.2 Annotation

- DESCRIPTION:
  This message prints strings on the sonar screen.
- SYNTAX:
  *ANNO,N,STRING<CR><LF>
- PARAMETERS:
  N – String number, 1 or 2.
  STRING – The string to be displayed on the sonar screen.
- EXAMPLE:
  *ANNO,1,RESON<CR><LF>
  This example will put the text RESON in the sonar screen display.

6.3.1.3 Bathymetric Baud Rate (bathy only)

- DESCRIPTION:
  This message controls the OUT baud rate for serial port 1. Serial port 1 OUT transmits bathymetric data.
- SYNTAX:
  *BAUD,N<CR><LF>
- PARAMETERS:
  N – Baud rate. Different speeds are 1200, 2400, 4800, 9600, 19200, 38400, 57600, 115200.
- EXAMPLE:
  *BAUD,115200<CR><LF>
  The example sets the OUT baud rate on serial port 1 to 115200.

6.3.1.4 BITE Screen

- DESCRIPTION:
  This message controls which screen that should be presented on the screen.
- SYNTAX:
  *BITE,N<CR><LF>
- PARAMETERS:
  N – Screen selection. 0 for the sonar screen and 1 for the BITE screen.
- EXAMPLE:
  *BITE,1<CR><LF>
  The BITE screen will now be displayed.

6.3.1.5 Maximum Range Filter (bathy only)

- DESCRIPTION:
  This message sets the maximum value for the range filter.
- SYNTAX:
  *BMAX,N<CR><LF>
- PARAMETERS:
  N – Max Range Filter [m]. The parameter go from 0 m to max range, but higher or equal than to the minimum range filter settings.
- EXAMPLE:
  *BMAX,100<CR><LF>
  This example sets the maximum range filter value to 100 m.

6.3.1.6 Minimum Range Filter (bathy only)

- DESCRIPTION:
  This message sets the minimum value for the range filter.
- SYNTAX:
  *BMIN,N<CR><LF>
- PARAMETERS:
  N – Min range filter [m]. The parameter go from 0 m to max range, but less or equal to the maximum range filter setting.
- EXAMPLE:
  *BMIN,10<CR><LF>
  This example sets the minimum range filter value to 10 m.

6.3.1.7 Contrast

- DESCRIPTION:
  This message sets contrast for the screen.
- SYNTAX:
  *BRIT,N<CR><LF>
- PARAMETERS:
  N – Brightness selection.
  0 – 1.0 times.
  1 – 1.25 times.
  2 – 1.5 times.
  3 – 2.0 times.
- EXAMPLE:
  *BRIT,1<CR><LF>
  This example sets the contrast to 1.0 times.

6.3.1.8 Calibrate

- DESCRIPTION:
  This message calibrates the system.
- SYNTAX:
  *CALB<CR><LF>
- PARAMETERS:
  None.
- EXAMPLE:
  *CALB<CR><LF>
  The system now does a calibration.

6.3.1.9 Color

- DESCRIPTION:
  This message sets palette for the screen.
- SYNTAX:
  *COLR,N<CR><LF>
- PARAMETERS:
  N – Color Selection.
  0 – Black and white.
  1 – Black.
  2 – Dark.
  3 – Dim.
  4 – Blue and yellow.
  5 – Vivid.
- EXAMPLE:
  *COLR,1<CR><LF>
  This example sets the palette to be black and white.

6.3.1.10 Command Baud Rate

- DESCRIPTION:
  This message selects the baud rate for reception of command messages on serial port 2.
- SYNTAX:
  *CTBR,N<CR><LF>
- PARAMETERS:
  N – Baud rate. Different speeds are 1200, 2400, 4800, 9600, 19200, 38400, 57600, 115200.
- EXAMPLE:
  *CTBR,115200<CR><LF>
  This example sets both IN and OUT baud rates on serial port 2 at 115200 baud.

6.3.1.11 Cursor

- DESCRIPTION:
  This message moves the cursor on the screen to X and Y position.
- SYNTAX:
  *CURS,X,Y<CR><LF>
- PARAMETERS:
  X – X Coordinate.
  Y – Y Coordinate.
- EXAMPLE:
  *CURS,0,0<CR><LF>
  This example moves the cursor to the upper left corner of the screen.

6.3.1.12 Date

- DESCRIPTION:
  Use this message to set the date (not used for time stamping any data).
- SYNTAX:
  *DATE,Year,Month,Day<CR><LF>
- PARAMETERS:
  Year – In four digits.
  Month – Month, 1 – 12.
  Day – Day, 1 – 31.
- EXAMPLE:
  *DATE,2001,3,8<CR><LF> The example sets the date to 8 March 2001.

6.3.1.13 Dot Check (bathy only)

- DESCRIPTION:
  This message controls the bottom detection dots on the sonar screen.
- SYNTAX:
  *DCHK,N<CR><LF>
- PARAMETERS:
  N – Dots selection.
  0 – Off. (No dots.)
  1 – Normal. (Displays all dots except those of poor quality.)
  2 – All. (Displays all dots in white, even the quality dots.)
  3 – Quality. (Displays all dots, color-coded with quality.)
  4 – Process. (Displays all dots, color-coded depending on the bottom detection algorithm.)
- EXAMPLE:
  *DCHK,0<CR><LF>
  This example turns the dots Off.

6.3.1.14 Maximum Depth Filter (bathy only)

- DESCRIPTION:
  This message sets the maximum value for the depth filter.
- SYNTAX:
  *DMAX,N<CR><LF>
- PARAMETERS:
  N – Max depth filter [m]. The parameter go from 0 m to max range, but higher or equal than to the minimum depth filter settings.
- EXAMPLE:
  *DMAX,100<CR><LF>
  This example sets the maximum depth filter value to 100 m.

6.3.1.15 Minimum Depth Filter (bathy only)

- DESCRIPTION:
  This message sets the minimum value for the depth filter.
- SYNTAX:
  *DMIN,N<CR><LF>
- PARAMETERS:
  N – Min depth filter [m]. The parameter go from 0 m to max range, but less or equal to the maximum depth filter setting.
- EXAMPLE:
  *DMIN,10<CR><LF>
  This example sets the minimum depth filter value to 10 m.

6.3.1.16 Bathymetric Data Output Selection (bathy only)

- DESCRIPTION:
  This message selects the output port for bathy data.
- SYNTAX:
  *DOUT,N<CR><LF>
- PARAMETERS:
  N – Output selection parameter. 0 for RS-232 or 1 for Ethernet.
- EXAMPLE:
  *DOUT,1<CR><LF>
  This example sets processor unit to output bathy data on the Ethernet port.

6.3.1.17 Maximum Ping Rate

- DESCRIPTION:
  This message sets the maximum ping rate in pings per second.
- SYNTAX:
  *DRAT,N<CR><LF>
- PARAMETERS:
  N – Max data pings goes from 10 to 400 (= 1.0 to 40.0 pings per second).
- EXAMPLE:
  *DRAT,200<CR><LF>
  This message sets processor to output a maximum of 20 pings per second.

6.3.1.18 Filter Setting (bathy only)

- DESCRIPTION:
  This message sets which filters should be used.
- SYNTAX:
  *FILT,N<CR><LF>
- PARAMETERS:
  N – Filter selection.
  0 – No filter.
  1 – Range filter only.
  2 – Depth filter only.
  3 – Both filters.
- EXAMPLE:
  *FILT,1<CR><LF>
  This example sets processor to use the range filter only.

6.3.1.19 Flip

- DESCRIPTION:
  This message tells the 81-P processor box of the orientation for the head.
- SYNTAX:
  *FLIP,N<CR><LF>
- PARAMETERS:
  N – Orientation value.
  0 – Projector forward/up.
  1 – Projector aft/down.
- EXAMPLE:
  *FILP,0<CR><LF>
  This message tells 81-P processor that the head is mounted with projector forward.

6.3.1.20 Freeze

- DESCRIPTION:
  This message freezes the data in the wedge on the sonar screen.
- SYNTAX:
  *FREZ,N<CR><LF>
- PARAMETERS:
  N – Freeze selection. 0 for OFF and 1 for freeze.
- EXAMPLE:
  *FREZ,1<CR><LF>
  This example freezes the data on the screen.

6.3.1.21 Force Wet Download (8101 / 8111 only)

- DESCRIPTION:
  This message forces the 81-P to download the new firmware into the sonar head bypassing the version number verification check.
- SYNTAX:
  *FWET,N<CR><LF>
- PARAMETERS:
  N – Download mode
  0 – Stop the download
  1 – Begin download using method 1 (good uplink required)
  2 – Begin download using method 2 (uplink not required)
- EXAMPLE:
  *FWET,1<CR><LF>
  This example forces a wet download when a good uplink is available.

6.3.1.22 Manual Gain

- DESCRIPTION:
  This message sets the manual gain for the 81-P processor.
- SYNTAX:
  *GAIN,N<CR><LF>
- PARAMETERS:
  N – Manual gain value.
- EXAMPLE:
  *GAIN,1<CR><LF>
  This example sets the 81-P processor to the minimal manual gain, 1.

6.3.1.23 Grid

- DESCRIPTION:
  This message sets different grid options.
- SYNTAX:
  *GRID,N<CR><LF>
- PARAMETERS:
  N – Grid value.
  0 – Off, no grid.
  1 – Just the border.
  2 – Border and lines.
  3 – Full.
- EXAMPLE:
  *GRID,1<CR><LF>
  This example sets the processor to display only the border around the wedge.

6.3.1.24 Gain Mode

- DESCRIPTION:
  This message sets the gain mode.
- SYNTAX:
  *GTYP,N<CR><LF>
- PARAMETERS:
  N – Gain Mode Value.
  0 – Fixed.
  1 – TVG.
- EXAMPLE:
  *GTYP,1<CR><LF> This example sets the processor to gain mode, TVG.

6.3.1.25 Menu

- DESCRIPTION:
  This message sets the menu.
- SYNTAX:
  *MENU,N<CR><LF>
- PARAMETERS:
  N – Menus.
  0 – Main.
  1 – Filters.
  2 – Ocean.
  3 – Off.
  4 – Display.
- EXAMPLE:
  *MENU,0<CR><LF>
  This message sets the current menu to main menu.

6.3.1.26 Motion Sensor Baud Rate

- DESCRIPTION:
  This message controls the IN baud rate for serial port 3. Serial port 3 IN receives motion sensor data.
- SYNTAX:
  *MSBR,N<CR><LF>
- PARAMETERS:
  N – Baud rate. Different speeds are 1200, 2400, 4800, 9600, 19200, 38400, 57600, 115200.
- EXAMPLE:
  *BAUD,19200<CR><LF>
  This message sets the IN baud rate on serial port 3 to 19200.

6.3.1.27 Network

- DESCRIPTION:
  This message sets the different network addresses used and the UDP Port.
- SYNTAX:
  *NADR,N,PARAM<CR><LF>
- PARAMETERS:
  N – Type of address to set.
  0 – Local IP address (processor box).
  1 – Remote IP address (data collection system).
  2 – UDP port.
  3 – Gateway IP address (router).
  4 – Subnet mask.
  PARAM – The Param is dependent of the Type.
  Type 0 – IP address (XXX.XXX.XXX.XXX)
  Type 1 – IP address (XXX.XXX.XXX.XXX)
  Type 2 – UDP port (XXXXX)
  Type 3 – IP address (XXX.XXX.XXX.XXX)
  Type 4 – Subnet mask (XXX.XXX.XXX.XXX)
- EXAMPLE:
  *NADR,1,10.0.1.245<CR><LF>
  This example sets the 81-P processor IP address to 10.0.1.245.

6.3.1.28 Power

- DESCRIPTION:
  This message sets the sonar transmitter power.
- SYNTAX:
  *POWR,N<CR><LF>
- PARAMETERS:
  N – The power value.
- EXAMPLE:
  *POWR,0<CR><LF>
  This message sets the power to OFF.

6.3.1.29 Projector

- DESCRIPTION:
  This message selects the projector type.
- SYNTAX:
  *PROJ,N<CR><LF>
- PARAMETERS:
  N – Projector type.

8101-150/210	0 - Stick, 1 - Mainarray, 2 - E-R, 3 - Steer1.5, 4 - Steer3.0, 5 - Steer4.5, 6 - Steer6.0, 7- Steertest, 8 - Scantest
8102-150	0 - Stick, 1 - Mainarray, 2 - E-R
8111	0 - Steer1.5, 1 - Steer3.0, 2 - Steer 4.5, 3 - Steer6.0, 4 - Steertest, 5 - Scantest
8124	0 - Normal
8125	0 - Normal
8128	0 - Wide, 1 - Narrow
8150 (12 kHz)	0 - Steer2.0, 1 - Steer3.0, 2 - Steer4.5, 3 - Steer6.0, 4 - Steertest, 5 - Scantest
8150 (24 kHz)	0 - Steer1.0, 1 - Steer1.5, 2 - Steer2.5, 3 - Steer4.0, 4 - Steertest, 5 - Scantest
8160	0 - Steer1.5, 1 - Steer3.0, 2 - Steer 4.5, 3 - Steer6.0, 4 - Steertest, 5 - Scantest

- EXAMPLE:
  *PROJ,0<CR><LF>
  For an 8101-150 this example selects stick projector.

6.3.1.30 Pitch Stabilization

- DESCRIPTION:
  This message sets pitch stabilization mode.
- SYNTAX:
  *PSTB,N<CR><LF>
- PARAMETERS:
  N – Mode.
  0 – Unstabilized.
  1 – Stabilize using the most recent value from motion sensor.
  2 – Stabilize using a motion prediction.
- EXAMPLE:
  *PSTB,2<CR><LF>
  Sets pitch-stabilization to mode 2.

6.3.1.31 Bathymetric Packet Format (bathy only)

- DESCRIPTION:
  This message sets the bathymetric packet format.
- SYNTAX:
  *PTYP,N<CR><LF>
- PARAMETERS:
  N – Packet format selection, 0 for R-theta or 1 for RI-theta.
- EXAMPLE:
  *PTYP,0<CR><LF>
  This example sets the 81-P processor to output R-theta bathy packets.

6.3.1.32 Pulse Width

- DESCRIPTION:
  This message sets the pulse width in seconds.
- SYNTAX:
  *PWID,N <CR><LF>
- PARAMETERS:
  N – Pulse width value in seconds.
- EXAMPLE:
  *PWID,0.0017<CR><LF>
  Sets transmit pulse-width to 0.0017 seconds.

6.3.1.33 Range

- DESCRIPTION:
  This message changes the range setting.
- SYNTAX:
  *RANG,N <CR><LF>
- PARAMETERS:
  N – Range value..
- EXAMPLE:
  *RANG,5<CR><LF>
  This example sets the range setting to 5 m.

6.3.1.34 Raw Output Beam Selection (raw output only)

- DESCRIPTION:
  This message sets the first exported beam.
- SYNTAX:
  *RAWB,N<CR><LF>
- PARAMETERS:
  N – First exported beam (0 to maximum number of beams – 1)
- EXAMPLE:
  *RAWB,0<CR><LF>
  This message sets the first exported beam to be 0 (first beam).

6.3.1.35 Raw Output Mode Selection (raw output only)

- DESCRIPTION:
  This message sets the raw output mode.
- SYNTAX:
  *RAWM,N<CR><LF>
- PARAMETERS:
  N – Mode
  0 – No data exported.
  1 – 16 bits magnitude, 20 beams exported.
  2 – 16 bits magnitude and 16 bits phase, 10 beam exported.
  3 – 8 bits magnitude, 40 beams exported.
- EXAMPLE:
  *RAWM,1<CR><LF>
  This message sets the raw output mode to 1 where 16 bit magnitude data (20 beams) are being exported.

6.3.1.36 Reset

- DESCRIPTION:
  This message resets the 81-P processor.
- SYNTAX:
  *RSET<CR><LF>
- PARAMETERS:
  N/A
- EXAMPLE:
  *RSET<CR><LF>
  This message resets the processor.

6.3.1.37 Roll Stabilization

- DESCRIPTION:
  This message sets roll stabilization mode.
- SYNTAX:
  *RSTB,N<CR><LF>
- PARAMETERS:
  N – Mode.
  0 – Unstabilized.
  1 – Stabilize using the most recent value from motion sensor.
  2 – Stabilize using a motion prediction.
- EXAMPLE:
  *RSTB,1<CR><LF>
  Sets roll-stabilization to mode 1.

6.3.1.38 Snap Shot

- DESCRIPTION:
  This message tells the processor to transmit a complete snap shot of beamformed magnitude and phase data over the network.
- SYNTAX:
  *SNAP<CR><LF>
- PARAMETERS:
  N/A
- EXAMPLE:
  *SNAP<CR><LF>
  The 81-P processor now starts transmit a snap shot in several UDP packets.

6.3.1.39 Sound Speed

- DESCRIPTION:
  This message sets the sound speed.
- SYNTAX:
  *SSPD,N<CR><LF>
- PARAMETERS:
  N – Sound speed value from 1350 to 1600 m/s.
- EXAMPLE:
  *SSPD,1480<CR><LF>
  This example sets the sound speed to 1480 m/s.

6.3.1.40 Projector Steering (8129 only)

- DESCRIPTION:
  This message steers the projector (if steerable).
- SYNTAX:
  *STER,N<CR><LF>
- PARAMETERS:
  N – Steering option.
- EXAMPLE:
  *STER,1<CR><LF>
  This Message sets the steering option to 1.

6.3.1.41 TVG Coefficients

- DESCRIPTION:
  This message sets the 81-P processor TVG coefficients.
- SYNTAX:
  *STVG,SPREADING,ABSORPTION<CR><LF>
- PARAMETERS:
  SPREADING – The value is represented in quarters of a dB. The value should be multiplied by 4 (0 to 240 = 0.0 to 60.0 * log (Range))
  ABSORPTION – The absorption value can be from 0 to 120 dB/km.
- EXAMPLE:
  *STVG,20,60<CR><LF>
  This message sets spreading loss to 5 dB and the absorption to 60 dB/km.

6.3.1.42 Sidescan (not applicable to all systems)

- DESCRIPTION:
  This message sets the processor sidescan output format.
- SYNTAX:
  *STYP,N<CR><LF>
- PARAMETERS:
  N – Sidescan type
  0 – Off.
  1 – Average new.
  2 – RMS new.
  3 – Full new.
  4 – Off.
  5 – Average old.
  6 – RMS old.
  7 – Full old.
- EXAMPLE:
  *STYP,1<CR><LF>
  This example sets sidescan output to ‘Average new’.

6.3.1.43 CTD Baud Rate

- DESCRIPTION:
  This message controls the IN baud rate for downlink port 1. The port IN receives CTD data.
- SYNTAX:
  *SVBR,N<CR><LF>
- PARAMETERS:
  N – Baud rate. Different speeds are 1200, 2400, 4800, 9600, 19200, 38400, 57600, 115200.
- EXAMPLE:
  *SVBR,9600<CR><LF> This example sets the IN baud rate on downlink port 1 to 9600.

6.3.1.44 Version

- DESCRIPTION:
  This message returns the wet end and dry end software version.
- SYNTAX:
  *SVER<CR><LF>
- PARAMETERS:
  N/A
- EXAMPLE:
  *SVER<CR><LF>
  The message returns *SVER,????-????-????,????-????-????<CR><LF>, where the ??? are the version numbers.

6.3.1.45 Synchronization

- DESCRIPTION:
  This message selects the synchronization method between the 81-P processors.
- SYNTAX:
  *SYNC,N<CR><LF>
- PARAMETERS:
  N – Synchronization Value.
  0 – Stand-alone.
  1 – Slave.
  2 – Master.
- EXAMPLE:
  *SYNC,0<CR><LF>
  The example sets the 81-P processor to stand-alone.

6.3.1.46 Head Tilt (bathy only)

- DESCRIPTION:
  This message sets the head tilt angle.
- SYNTAX:
  *TILT,N<CR><LF>
- PARAMETERS:
  N – Tilt angle from –180° to +180°.
- EXAMPLE:
  *TILT,-1<CR><LF>
  The example sets the tile angle to -1°.

6.3.1.47 Time

- DESCRIPTION:
  This message sets the processor time (not used for time stamping any data).
- SYNTAX:
  *TIME,HH,MM,SS<CR><LF>
- PARAMETERS:
  HH – Hour, 0 – 23.
  MM – Minute, 0 – 59.
  SS – Second, 0 – 59.
- EXAMPLE:
  *TIME,13,42,1<CR><LF>
  The example sets the Processor time to 13:42:01.

6.3.1.48 UTC-Time Baud Rate

- DESCRIPTION:
  This message controls the IN baud rate for serial port 1. The port IN receives UTC-time data.
- SYNTAX:
  *TMBR,N<CR><LF>
- PARAMETERS:
  N – Baud rate. Different speeds are 1200, 2400, 4800, 9600, 19200, 38400, 57600, 115200.
- EXAMPLE:
  *TMBR,19200<CR><LF>
  This message sets the In baud rate on serial port 1 to 19200.

6.3.1.49 Test Pattern

- DESCRIPTION:
  This message tells the 81-P processor to output a test pattern. The test pattern represents a flat seafloor and a bump moving from beam to beam.
- SYNTAX:
  *TPAT,N<CR><LF>
- PARAMETERS:
  N – Test pattern value. 1 Turns the test pattern ON, any other value turns it OFF.
- EXAMPLE:
  *TPAT,1<CR><LF>
  The message sets the test pattern ON.

6.3.1.50 Uplink

- DESCRIPTION:
  This message selects the uplink port.
- SYNTAX:
  *UPLK,N<CR><LF>
- PARAMETERS:
  N – Uplink port.
  0 – COAX 1.
  1 – COAX 2.
  2 – FIBER 1.
  3 – FIBER 2.
- EXAMPLE:
  *UPLK,1<CR><LF>
  The example tells the processor to receive uplink on port coax 2.

6.3.1.51 Video Mode

- DESCRIPTION:
  This message selects the video mode.
- SYNTAX:
  *VMOD,N<CR><LF>
- PARAMETERS:
  N – Video mode.
  0 – NTSC.
  1 – PAL.
  2 – SVGA.
- EXAMPLE:
  *VMOD,1<CR><LF>
  This example sets the video mode to PAL.

6.3.2 Time Stamp Messages

This message is used for time stamping the bathymetric and sidescan data that is output to the network. The time should be in UTC format with the following syntax. See section B.3.6.1 for a description of the relationship of time stamps to data.

- UTC
  Message – $UTC,YYYYMMDD,HHMMSS.TTTT<CR><LF>

  Where:

Field	Description	Ranges
$UTC	Start of Message	
YYYY	Years	0000 – 9999
MM	Month	01 – 12
DD	Day	01-31
HH	Hour	00-23
MM	Minute	00-59
SS	Second	00-59
TTTT	Tenths of Milliseconds	0000-9999

6.3.2.1 Time Synchronization of SeaBat Data

The SeaBat output message packets will always include a latency time, the time interval between the sonar ping and the output of the first element of the data packet by the sonar. These latency times will be independently generated and entered into the packets for each type of data output: bathymetry, side scan, and snippets data.

If the data collection system is using the time of receipt of the data packet to determine the sonar ping time for the data packet, the latency should be subtracted from the time of receipt to determine the ping time.

If the data collection system is outputting the UTC time synchronization message to the sonar, and using the time reported within the data packet to determine the ping time associated with the data set, the latency offset should NOT be applied to the time.

6.3.3 CTD Data

The Processor currently accepts SeaBird CTD data in the following two formats.

- CT
  Message - TTT.TTTT,CC.CCCCC,SSSS.SSSS,VVVVV.VVV<CR><LF>

  Where:

Field	Description	Unit
TTT.TTTT	Temperature	Celsius
CC.CCCCC	Conductivity	Siemens Per meter
SSSS.SSS	Salinity	Parts per Thousand
VVVVV.VVV	Sound Velocity	Meter per Second

- CTD
  Message – TTT.TTTT,CC.CCCCC,PPPPP.PPP,SSSS.SSSS,VVVVV.VVV<CR><LF>

  Where:

Field	Description	Unit
TTT.TTTT	Temperature	Celsius
CC.CCCCC	Conductivity	Siemens Per meter
PPPP.PPP	Pressure	Decibars
SSSS.SSS	Salinity	Parts per Thousand
VVVVV.VVV	Sound Velocity	Meter per Second

It also supports an AML Smart Sensor.
Message – SVVVV.VVS<CR><LF>

Where:

Field	Description	Unit
VVVV.VV	Sound Velocity	Meter per Second
S	Space Character	

6.3.4 Motion Sensor Data

The sign convention for an 81-P is:

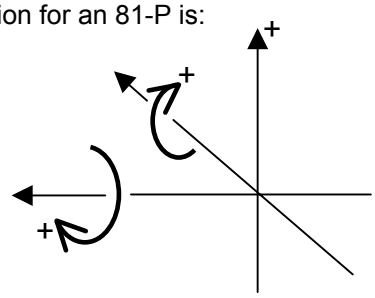

Valid motion sensor messages are as follows.

- TSS DMS05
  Message – :XXAAAASMHHHHQMRRRRSMPPPP<CR><LF>

  Where:

Field	Description	Range	Units
:	Start of Message		
XX	Horizontal Acceleration	0 to 9.81 m/s^2	3.83 cm/s^2
AAAA	Vertical Acceleration	-20.48 to 20.47 m/s^2	0.0625 cm/s^2
S	Space Character		
MHHHH	Heave	-99 to 99 m	1 cm
Q	Status Flag	u, U, g, G, h, H, f, F	
MRRRR	Roll	-90° to 90°	0.01°
MPPPP	Pitch	-90° to 90°	0.01°
M	‘ ‘ if positive or ‘-‘ if negative		

- TSS 335B
  Message – :XXAAAASMHHHHSMRRRRSMPPPP<CR><LF>

  Where:

Field	Description	Range	Units
:	Start of Message		
XX	Horizontal Acceleration	0 to 9.81 m/s^2	3.83 cm/s^2
AAAA	Vertical Acceleration	-20.48 to 20.47 m/s^2	0.0625 cm/s^2
S	Space Character		
MHHHH	Heave	-99 to 99 m	1 cm
S	Space Character		
MRRRR	Roll	-90° to 90°	0.01°
MPPPP	Pitch	-90° to 90°	0.01°
M	‘ ‘ if positive or ‘-‘ if negative		

- TSS 332B
  Message – MRRRRMPPPP<CR>

  Where:

Field	Description	Range	Units
MRRRR	Roll	-90° to 90°	0.01°
MPPPP	Pitch	-90° to 90°	0.01°
M	‘ ‘ if positive or ‘-‘ if negative		

- **Seatex MRU**

  The binary format{xe "binary format"} consists of a fixed-length message using single-byte unsigned and 4-byte IEEE floating point data elements. For the multi-byte elements, the most significant byte is transmitted first.

Note:Each <> indicates one byte of data.

```
<71><11><2f><3d><50><e5><60><bd><50><e5><60><be><50><e5><60><3f><9d><f3><b6><cb>
 |       |     | |                  ||                  ||                  ||                  |  |
 |       |     | |       Roll       ||      Pitch       ||       Yaw        ||     PosMonD      |  |_ check
 |       |     | |  = 0x3d50e560    ||  = 0xbd50e560    ||  = 0xbe50e560    ||  = 0x3f9df3b6    |
 |       |     | |  IEEE float      ||  IEEE float      ||  IEEE float      ||  IEEE float      |
 |       |     | |  -> 0.051 rad    ||  ->-0.051 rad    ||  ->-0.204 rad    ||  -> 1.234  m     |
 |       |     |
 |       |     |__ user selected token (associated with this configuration)
 |       |
 |       |__ length is 4 * sizeof(float) + 1 (token) = 4* 4 + 1 = 17 = hex 11
 |
 |__ header ('q'),replaced with 'Q' when data is unstable (i.e. at startup).
```

Format:

Field	Units	Format	Bytes	Value
Header		ASCII	1	ASCII 'q' or 'Q'
Length		Unsigned	1	0x11
Token		Unsigned	1	0 - 255
Roll	radians	Float	4	
Pitch	radians	Float	4	
Yaw	radians	Float	4	
Heave	meters	Float	4	
Checksum		Unsigned	1	0 - 255

- **OCTANS STD 1**

Standard: Output NMEA 0183 compatible
Data sent: Heading, roll, pitch, position, linear speed, compensation values and status
Data frame:
$HEHDT,x.xx,T*hh<CR><LF>
where: x.xx is the true heading in degrees
hh is a checksum
$PHTRO,x.xx,a,y.yy,b*hh<CR><LF>
where: x.xx is the pitch in degrees
a is 'M' for bow up
a is 'P' for bow down
y.yy is the roll in degrees
b is 'B' for port down
b is 'T' for port up
$PHLIN,x.xxx,y.yyy,z.zzz*hh<CR><LF>
where: x.xxx is the surge (X1) in meters (signed)
y.yyy is the sway (X2) in meters (signed)
z.zzz is the heave (X3) in meters (signed)
$PHSPD,x.xxx,y.yyy,z.zzz*hh<CR><LF>
where: x.xxx is the X1 speed in m.s -1 (signed)
y.yyy is the X2 speed in m.s -1 (signed)
z.zzz is the X3 speed in m.s -1 (signed)
$PHCMP,llll.ll,a,xx.xx,b,N*hh<CR><LF>
where: llll.ll is the latitude in degrees (two first l) and in minutes (four last l)
a is 'N' for Northern hemisphere
a is 'S' for Southern hemisphere
xx.xx is the speed in knots
$PHINF,hhhhhhhh*hh<CR><LF>
where: hhhhhhhh is the hexadecimal value of Octans status

Bit 0	Heading not valid
Bit 1	Roll not valid
Bit 2	Pitch not valid
Bit 3	Position not valid
Bit 4	Position calculation started
Bit 5	Previous alignment
Bit 8	FOG X1 error
Bit 9	FOG X2 error
Bit 10	FOG X3 error
Bit 11	Optical source error
Bit 12	Accelerometer X1 error
Bit 13	Accelerometer X2 error
Bit 14	Accelerometer X3 error
Bit 15	Analog input A or B error
Bit 16	Serial input A error
Bit 17	Serial input B error
Bit 18	Serial input C error
Bit 20	Serial output A full
Bit 21	Serial output B full
Bit 22	Serial output C full

6.3.5 UDP Ports

All Data on the Ethernet uses different UDP Ports. The Base UDP port is the one you have selected for the Processor. The others are offsets to the base.

UDP PORT OFFSET	TYPE OF DATA
0	Bathymetric Data
+1	Sidescan (optional)
+2	Control / Status
+3	Alarm
+4	Snapshot
+5	Raw Beam Data (optional)
+6	Snippet Data (optional)

The download port for new Firmware has a fixed port, 8100.

6.3.6 Bathymetric Data

There are two different Bathymetric Data formats, R and RI Theta. The two formats are described in structures. The data types that are used are defined as follows and are in Big Endian.

Data Type	Bytes
char	1
short	2
long	4

6.3.6.1 Time Stamp

The DATA_TIME Struct are used for time stamping:

```
struct DATA_TIME
{
        unsigned long Seconds;          // Seconds since 00:00:00, 1 January 1970.
        unsigned long Millisecs;        // Milliseconds, LSB = 1ms.
};
```

The Time in the DATA_TIME Struct is based on UTC message from GPS passed through the DAC System to the Processor.

6.3.6.2 Sonar Latency

The drawing below shows the ping timing sequence. It illustrates the processor's three-ping latency.

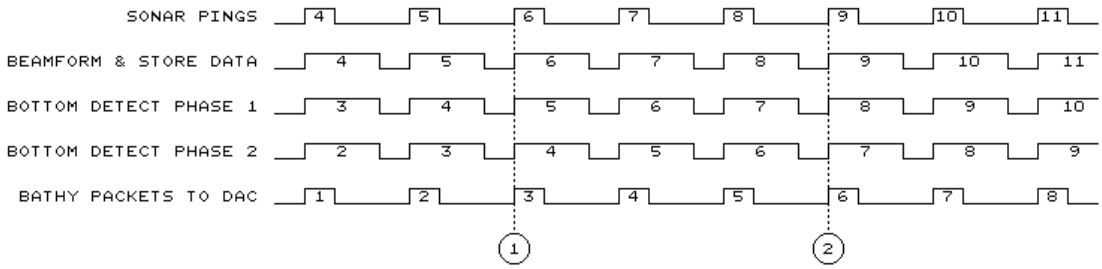

6.3.7 R Theta Packets

6.3.7.1 Packet Type 0x13 (older 8101 / 8111 only)

```
struct    RTHETA_8000
{
          char              synch_header[4];          // synch header {0xff, 0xff, 0x00, 0x00 }
          char              packet_type;              // identifier for packet type (0x13)
          char              packet_subtype;           // identifier for packet subtype
          DATA_TIME         data_time;                // time of ping for data packet
          unsigned short    latency;                  // time from ping to output (milliseconds)
          unsigned short    velocity;                 // programmed sound velocity
                                                      // (LSB = 0.1 m/sec)
          unsigned short    sample_rate;              // A/D sample rate (samples per second)
          unsigned char     pulse_width;              // transmit pulse width (microseconds)
          unsigned short    ping_rate;                // Ping rate (pings per second * 1000)
          unsigned short    range_set;                // range setting for SeaBat (meters )
          unsigned short    power;                    // power setting for SeaBat
          unsigned short    gain;                     // gain setting for SeaBat
          short             projector;                // projector setting
          unsigned char     tvg_spread;               // spreading coefficient for tvg * 4
                                                      // valid values = 0 to 240
                                                      // (0.0 to 60.0 in 0.25 steps)
          unsigned char     tvg_absorp;               // absorption coefficient for tvg
                                                      // valid values = 10 to 140
          unsigned char     beam_width;               // cross track receive beam width
          short             beam_count;               // number of sets of beam data in packet
          unsigned short    range[MAX_BEAMS];         // range for beam where
                                                      // n = Beam Count
          unsigned char     quality[MAX_BEAMS/2];     // packed quality array
                                                      // (two 4 bit values/char)
                                                      // Bytes are populated low order nibble
                                                      // first with the lower 4 bits for the first
                                                      // sounding and the higher 4 bits for the
                                                      // second sounding
          unsigned short    checksum;                 // checksum for data packet
};
```

6.3.7.2 Packet Type 0x17

```
struct    R_THETA_DATA
{
          char              synch_header[4];        // synch header {0xff, 0xff, 0x00, 0x00
          char              packet_type;            // identifier for packet type (0x17)
          char              packet_subtype;         // identifier for packet subtype
          unsigned short    latency;                // time from ping to output (milliseconds)
          DATA_TIME         data_time;              // time of ping for data packet (0 if no UTC input)
          unsigned long     ping_number;            // sequential ping number from sonar startup/reset
          unsigned long     sonar_id;               // least significant four bytes of Ethernet address
          unsigned short    sonar_model;            // coded model number of sonar
          unsigned short    frequency;              // sonar frequency in KHz
          unsigned short    velocity;               // programmed sound velocity (LSB = 1 m/sec)
          unsigned short    sample_rate;            // A/D sample rate (samples per second)
          unsigned short    ping_rate;              // ping rate (pings per second * 1000)
          unsigned short    range_set;              // range setting for SeaBat (meters )
          unsigned short    power;                  // power setting for SeaBat
          unsigned short    gain;                   // gain setting for SeaBat
                                                    // bits    0-6 -    gain (1 - 45)
                                                    // bit     14       (0 = fixed, 1 = tvg)
                                                    // bit     15       (0 = manual, 1 = auto)
          unsigned short    pulse_width;            // transmit pulse width (microseconds)
          unsigned char     tvg_spread;             // spreading coefficient for tvg * 4
                                                    // valid values = 0 to 240 (0.0 to 60.0 in 0.25 steps)
          unsigned char     tvg_absorp;             // absorption coefficient for tvg
          unsigned char     projector_type;         // bits 0-4 = projector type
                                                    // bit 7 - pitch steering (1=enabled, 0=disabled)
          unsigned char     projector_beam_width;   // along track transmit beam width (degrees * 10)
          unsigned short    beam_spacing_num;       // receive beam angular spacing numerator
          unsigned short    beam_spacing_denom;     // cross track receive beam angular spacing denominator
                                                    // beam width degrees = numerator / denominator
          short             projector_angle;        // projector pitch steering angle (degrees * 100)
          unsigned short    min_range;              // sonar filter settings
          unsigned short    max_range;
          unsigned short    min_depth;
          unsigned short    max_depth;
          unsigned char     filters_active;         // range/depth filters active
                                                    // bit 0 - range filter (0 = off, 1 = active)
                                                    // bit 1 - depth filter (0 = off, 1 = active)
          unsigned char     flags;                  // bit 0 - Roll stabilization flag. 0 = off, 1 = on.
          unsigned char     spare[2];               // spare field for future growth
          short             temperature;            // temperature at sonar head (deg C * 10)
          short             beam_count;             // number of sets of beam data in packet
          unsigned short    range[n];               // range for beam where n = beam_count
                                                    // range units = sample cells * 4 (“14.2” Format)
          unsigned char     quality[cnt];           // packed quality array (two 4 bit values/char)
                                                    // cnt = n/2 if beam count even, n/2+1 if odd
                                                    // cnt then rounded up to next even number
                                                    // e.g. if beam count=101, cnt=52
                                                    // unused trailing quality values set to zero
                                                    // bit 0 - brightness test (0=failed, 1=passed)
                                                    // bit 1 - colinearity test (0=failed, 1=passed)
                                                    // bit 2 - amplitude bottom detect used
                                                    // bit 3 - phase bottom detect used
                                                    // bytes are populated high order nibble first with the
                                                    // higher 4 bits for the first sounding and the lower 4 bits
                                                    // for the second sounding
                                                    // bottom detect can be amplitude, phase or both
          unsigned short    checksum;               // checksum for data packet
};
```

6.3.8 RI Theta Packets

6.3.8.1 Packet Type 0x14 (older 8101 / 8111only)

```
struct    RITHETA_8000
{
          char              synch_header[4];        // synch header {0xff, 0xff, 0x00, 0x00 }
          char              packet_type;            // identifier for packet type (0x13)
          char              packet_subtype;         // identifier for packet subtype
          DATA_TIME         data_time;              // time of ping for data packet
          unsigned short    latency;                // time from ping to output (milliseconds)
          unsigned short    velocity;               // programmed sound velocity (LSB = 0.1 m/sec)
          unsigned short    sample_rate;            // A/D sample rate (samples per second)
           unsigned char    pulse_width;            // transmit pulse width (microseconds)
           unsigned short   ping_rate;              // Ping rate (pings per second * 1000)
           unsigned short   range_set;              // range setting for SeaBat (meters )
          unsigned short    power;                  // power setting for SeaBat
          short             gain;                   // gain setting for SeaBat
          short             projector;              // projector setting
          unsigned char     tvg_spread;             // spreading coefficient for tvg * 4
                                                    // valid values = 0 to 240 (0.0 to 60.0 in 0.25 steps)
          unsigned char     tvg_absorp;             // absorption coefficient for tvg
          unsigned char     beam_width;             // cross track receive beam width
          short             beam_count;             // number of sets of beam data in packet
          unsigned short    range[MAX_BEAMS];       // range for beam where n = Beam Count
          unsigned char     quality[MAX_BEAMS];     // quality array (8 bit value/char)
          unsigned short    intensity[MAX_BEAMS];   // intensities at bottom detect
          unsigned short    checksum;               // checksum for data packet
};
```

6.3.8.2 Packet Type 0x18

```
struct    RI_THETA_DATA
{
          char              synch_header[4];        // synch header {0xff, 0xff, 0x00, 0x00
          char              packet_type;            // identifier for packet type (0x18)
          char              packet_subtype;         // identifier for packet subtype
          unsigned short    latency;                // time from ping to output (milliseconds)
          DATA_TIME         data_time;              // time of ping for data packet (0 if no UTC input)
          unsigned long     ping_number;            // sequential ping number from sonar startup/reset
          unsigned long     sonar_id;               // least significant four bytes of Ethernet address
          unsigned short    sonar_model;            // coded model number of sonar
          unsigned short    frequency;              // sonar frequency in KHz
          unsigned short    velocity;               // programmed sound velocity (LSB = 1 m/sec)
          unsigned short    sample_rate;            // A/D sample rate (samples per second)
          unsigned short    ping_rate;              // ping rate (pings per second * 1000)
          unsigned short    range_set;              // range setting for SeaBat (meters )
          unsigned short    power;                  // power setting for SeaBat
          unsigned short    gain;                   // gain setting for SeaBat
                                                    // bits    0-6 -     gain (1 - 45)
                                                    // bit     14        (0 = fixed, 1 = tvg)
                                                    // bit     15        (0 = manual, 1 = auto)
          unsigned short    pulse_width;            // transmit pulse width (microseconds)
          unsigned char     tvg_spread;             // spreading coefficient for tvg * 4
                                                    // valid values = 0 to 240 (0.0 to 60.0 in 0.25 steps)
          unsigned char     tvg_absorp;             // absorption coefficient for tvg
          unsigned char     projector_type;         // bits 0-4 = projector type
                                                    // bit 7 - pitch steering (1=enabled, 0=disabled)
          unsigned char     projector_beam_width;   // along track transmit beam width (degrees * 10)
          unsigned short    beam_spacing_num;       // receive beam angular spacing numerator
          unsigned short    beam_spacing_denom;     // cross track receive beam angular spacing denominator
                                                    // beam width degrees = numerator / denominator
          short             projector_angle;        // projector pitch steering angle (degrees * 100)
          unsigned short    min_range;              // sonar filter settings
          unsigned short    max_range;
          unsigned short    min_depth;
          unsigned short    max_depth;
          unsigned char     filters_active;         // range/depth filters active
                                                    // bit 0 - range filter (0 = off, 1 = active)
                                                    // bit 1 - depth filter (0 = off, 1 = active)
          unsigned char     flags;                  // bit 0 - Roll stabilization flag. 0 = off, 1 = on.
          unsigned char     spare[2];               // spare field for future growth
          short             temperature;            // temperature at sonar head (deg C * 10)
          short             beam_count;             // number of sets of beam data in packet
          unsigned short    range[n];               // range for beam where n = beam Count
                                                    // range units = sample cells * 4
          unsigned char     quality[cnt];           // packed quality array (two 4 bit values/char)
                                                    // cnt = n/2 if beam count even, n/2+1 if odd
                                                    // cnt then rounded up to next even number
                                                    // e.g. if beam count=101, cnt=52
                                                    // unused trailing quality values set to zero
                                                    // bit 0 - brightness test (0=failed, 1=passed)
                                                    // bit 1 - colinearity test (0=failed, 1=passed)
                                                    // bit 2 - amplitude bottom detect used
                                                    // bit 3 - phase bottom detect used
                                                    // bytes are populated high order nibble first with the
                                                    // higher 4 bits for the first sounding and the lower 4 bits
                                                    // for the second sounding
                                                    // bottom detect can be amplitude, phase or both
          unsigned short    intensity[n];           // intensities at bottom detect * 8
          unsigned short    checksum;               // checksum for data packet
};
```

6.3.8.3 Packet Type 0x18 (8111 only)

```
struct    RI_THETA_DATA
{
          char              synch_header[4];        // synch header {0xff, 0xff, 0x00, 0x00
          char              packet_type;            // identifier for packet type (0x18)
          char              packet_subtype;         // identifier for packet subtype
          unsigned short    latency;                // time from ping to output (milliseconds)
          DATA_TIME         data_time;              // time of ping for data packet (0 if no UTC input)
          unsigned long     ping_number;            // sequential ping number from sonar startup/reset
          unsigned long     sonar_id;               // least significant four bytes of Ethernet address
          unsigned short    sonar_model;            // coded model number of sonar
          unsigned short    frequency;              // sonar frequency in KHz
          unsigned short    velocity;               // programmed sound velocity (LSB = 1 m/sec)
          unsigned short    sample_rate;            // A/D sample rate (samples per second)
          unsigned short    ping_rate;              // ping rate (pings per second * 1000)
          unsigned short    range_set;              // range setting for SeaBat (meters )
          unsigned short    power;                  // power setting for SeaBat
          unsigned short    gain;                   // gain setting for SeaBat
                                                    // bits     0-6 -     gain (1 - 45)
                                                    // bit      14        (0 = fixed, 1 = tvg)
                                                    // bit      15        (0 = manual, 1 = auto)
          unsigned short    pulse_width;            // transmit pulse width (microseconds)
          unsigned char     tvg_spread;             // spreading coefficient for tvg * 4
                                                    // valid values = 0 to 240 (0.0 to 60.0 in 0.25 steps)
          unsigned char     tvg_absorp;             // absorption coefficient for tvg
          unsigned char     projector_type;         // bits 0-4 = projector type
                                                    // bit 7 - pitch steering (1=enabled, 0=disabled)
          unsigned char     projector_beam_width;   // along track transmit beam width (degrees * 10)
          unsigned short    beam_spacing_num;       // receive beam angular spacing numerator
          unsigned short    beam_spacing_denom;     // cross track receive beam angular spacing denominator
                                                    // beam width degrees = numerator / denominator
          short             projector_angle;        // projector pitch steering angle (degrees * 100)
          unsigned short    min_range;              // sonar filter settings
          unsigned short    max_range;
          unsigned short    min_depth;
          unsigned short    max_depth;
          unsigned char     filters_active;         // range/depth filters active
                                                    // bit 0 - range filter (0 = off, 1 = active)
                                                    // bit 1 - depth filter (0 = off, 1 = active)
          unsigned char     flags;                  // bit 0 - Roll stabilization flag. 0 = off, 1 = on.
          unsigned char     spare[2];               // spare field for future growth
          short             temperature;            // temperature at sonar head (deg C * 10)
          short             beam_count;             // number of sets of beam data in packet
          unsigned short    range[n];               // range for beam where n = beam Count
                                                    // range units = sample cells * 4
          unsigned char     quality[cnt];           // packed quality array (two 4 bit values/char)
                                                    // cnt = n/2 if beam count even, n/2+1 if odd
                                                    // cnt then rounded up to next even number
                                                    // e.g. if beam count=101, cnt=52
                                                    // unused trailing quality values set to zero
                                                    // bit 0 - brightness test (0=failed, 1=passed)
                                                    // bit 1 - colinearity test (0=failed, 1=passed)
                                                    // bit 2 - amplitude bottom detect used
                                                    // bit 3 - phase bottom detect used
                                                    // bytes are populated high order nibble first with the
                                                    // higher 4 bits for the first sounding and the lower 4 bits
                                                    // for the second sounding
                                                    // if beam_spacing-num = 180, bytes are populated low
                                                    // order nibble first with the lower 4 bits for the first sounding
                                                    // and the higher 4 bits for the second sounding
                                                    // bottom detect can be amplitude, phase or both
          unsigned short    intensity[n];           // intensities at bottom detect * 8
          unsigned short    checksum;               // checksum for data packet
};
```

6.3.9 Sidescan Imagery Packets

When the sidescan option is present in the sonar and enabled, the sonar will output a left and right sidescan packet for each sonar ping. The sidescan data will be generated using the same ping as the bathymetry so it will be possible for the data collection system or subsequent processing to use the bathymetry data to geographically register the imagery. Since the sidescan data will be output by the sonar on ethernet and this type of output has a limitation of 1500 bytes or less, the ping data from each beam may be broken up into multiple packets. The information for the two beams will be output as a series of amplitude values, starting from the outermost sample cell on the port side, through the center to the outermost sample cell on the starboard side. The network transport protocol used is UDP/IP.

The number of amplitude values output for each packet will vary with range. If RMS or average modes are used the data will be compressed to a maximum of 1024 samples per channel.

The data from the sonar will not be slant range corrected. Determining the altitude of the sonar head and performing slant range correction will be the responsibility of the data acquisition system.

The sonar imagery data will not be compensated for changes in sonar power and gain.

6.3.9.1 Sidescan Packet

```
struct    SIDESCAN_IMAGE
{
          char                  STX;            // start character (0x02)
          char                  id;             // packet id (0x48)
          unsigned short        packet_size;    // size of packet - next field through last Amplitude value
          unsigned long         ping_no;        // sequential ping number since sonar power-up / reset
          DATA_TIME             data_time;      // time of ping for data packet
          unsigned short        total_samples;  // total number of amplitude samples for ping
          unsigned short        ping_packet;    // sequence number - (0 to n )
          unsigned short        velocity;       // programmed sound velocity (LSB = 1 m/sec)
          unsigned short        sample_rate;    // A/D sample rate (samples per second)
          unsigned short        ping_rate;      // Ping rate (pings per second * 1000)
          unsigned short        range_set;      // range setting for SeaBat (meters)
          unsigned short        power;          // power setting for SeaBat
          unsigned short        gain;           // gain setting for SeaBat
                                                // bits    0-6 -     gain (1 - 45)
                                                // bit     14        (0 = fixed, 1 = tvg)
                                                // bit     15        (0 = manual, 1 = auto)
          unsigned char         pulse_width;    // transmit pulse width (microseconds)
          unsigned char         tvg_spread;     // spreading coefficient for tvg * 4
                                                // valid values = 0 to 240 (0.0 to 60.0 in 0.25 steps)
          unsigned char         tvg_absorp;     // absorption coefficient for tvg
          unsigned char         flags;          // bit 0 - Roll stabilization flag. 0 = off, 1 = on.
          unsigned short        spare1[2];      // more spares
          short                 projector;      // projector setting
          unsigned short        sample_count;   // number of amplitude samples in packet
          unsigned short        amplitude[n];   // amplitude data where n = sample_count
                                                // 12 bit amplitude stored in 12 most significant bits
          unsigned char         spare2;         // spare to align ETX & checksum
          char                  ETX;            // packet end character (0x03)
          unsigned short        checksum;       // checksum for data packet
};
```

6.3.10 Snippet Data Format

The processor outputs snippet data via UDP/IP (base port + 6). Each ping generates a burst of Ethernet packets containing one SNP0 header followed by BeamCnt snippets (one snippet per beam). Each snippet consists of one or more fragments. The processor packs fragments into large efficient Ethernet packets. Each fragment consists of one SNP1 header followed by many samples of unsigned short magnitude data. Every Ethernet packet begins with either a SNP0 or SNP1 header.

Below are the C structures for the SNP0 and SNP1 headers. The SNP0 header is similar to a bathymetry header. All integers are big-endian (MSB first). All structures are packed (no alignment gaps). Short has 16 bits. Long has 32 bits. GainStart and GainEnd are currently set to zero; and reserved for future use.

6.3.10.1 Header Formats:

```
/* ID values for the SNP0 and SNP1 headers */
#define SNIPPET_ID_SNP0 0x534E5030  /* 'SNP0' */
#define SNIPPET_ID_SNP1 0x534E5031  /* 'SNP1' */

struct SNP0  /* ping header (there are BEAMS snippets per ping) */
{
  unsigned long  ID;          /* identifier code */
  unsigned short HeaderSize;   /* header size, bytes */
  unsigned short DataSize;     /* data size following header, bytes */
  unsigned long  PingNumber;   /* sequential ping number */
  unsigned long  Seconds;      /* time since since 00:00:00, 1-Jan-1970 */
  unsigned long  Millisec;
  unsigned short Latency;      /* time from ping to output (milliseconds) */
  unsigned short SonarID[2];   /* least significant four bytes of Ethernet address */
  unsigned short SonarModel;   /* coded model number of sonar */
  unsigned short Frequency;    /* sonar frequency (kHz) */
  unsigned short SSpeed;       /* programmed sound velocity (m/sec) */
  unsigned short SampleRate;   /* A/D sample rate (samples/sec) */
  unsigned short PingRate;     /* pings per second, 0.001 Hz steps */
  unsigned short Range;        /* range setting (meters) */
  unsigned short Power;        /* power */
  unsigned short Gain;         /* gain (b15=auto, b14=TVG, b6..0=gain) */
  unsigned short PulseWidth;   /* transmit pulse width (microseconds) */
  unsigned short Spread;       /* TVG spreading, n*log(R), 0.25dB steps */
  unsigned short Absorp;       /* TVG absorption, dB/km, 1dB steps */
  unsigned short Proj;         /* b7 = steering, b4..0 = projector type */
  unsigned short ProjWidth;    /* transmit beam width along track, 0.1 deg steps */
  unsigned short SpacingNum;   /* receiver beam spacing, numerator, degrees */
  unsigned short SpacingDen;   /* receiver beam spacing, denominator */
        short ProjAngle;    /* projector steering, degrees*PKT_STEER_RES */
  unsigned short MinRange;     /* range filter settings */
  unsigned short MaxRange;
  unsigned short MinDepth;     /* depth filter settings */
  unsigned short MaxDepth;
  unsigned short Filters;      /* enabled filters: b1=depth, b0=range */
  struct                       /* one byte containing eight status flags */
  {
    unsigned Spare    : 12;
    unsigned SnipMode : 3;     /* menu item setting */
    unsigned RollStab : 1;     /* bit0: roll stabilization enabled */
  } bFlags;
        short HeadTemp;     /* head temperature, 0.1C steps */
  unsigned short BeamCnt;      /* number of beams */
};
```

```
struct SNP1  /* fragment header (one or more fragments per snippet) */
{
  unsigned long  ID;          /* identifier code */
  unsigned short HeaderSize;   /* header size, bytes */
  unsigned short DataSize;     /* data size following header, bytes */
  unsigned long  PingNumber;   /* sequential ping number */
  unsigned short Beam;         /* beam number, 0..N-1 */
  unsigned short SnipSamples;  /* snippet size, samples */
  unsigned short GainStart;    /* gain at start of snippet, 0.01 dB steps, 0=ignore */
  unsigned short GainEnd;      /* gain at end of snippet, 0.01 dB steps, 0=ignore */
  unsigned short FragOffset;   /* fragment offset, samples from ping */
  unsigned short FragSamples;  /* fragment size, samples */
};
```

6.3.11 Alarm

The Alarm Message is Networked based and is transmitted if there is an alarm condition. The message is in ASCII.

- MESSAGE:
  !ALARM,N<\r><\n>Alarm Messages
- PARAMETERS:
  N – Number of Alarms in Message.
  Alarm Message – See Below.

Available Alarm Messages are:

1. Leak
   SYNTAX:
   !LEAK,V<\r><\n>
   WHERE:
   V – Is the Voltage Value in the sonar head.

2. Uplink Bad
   SYNTAX:
   !UPLINKBAD<\r><\n>

3. Downlink Bad
   SYNTAX:
   !DOWNLINKBAD<\r><\n>

Chapter 7 - Internal Interfaces

7.1 Introduction

This chapter provides a description of the internal interfaces between the Sonar Processor and the Sonar Head. For external interfaces (to other sensors) see Chapter 6. The following is an Internal Interface summary for the SeaBat 8101 system.

7.2 Summary

The combination of Sonar Processor and Sonar Head requires three interfaces for stand-alone operation:

1. Power
2. Uplink data
3. Downlink data

- Power: The sonar Head requires a nominal 24 VDC for operation. However, a voltage range of 22 to 30 volts is acceptable if power is from an ROV.

- Uplink: The uplink between the Transceiver Unit and the Sonar Processor is a high-speed digital data stream running at 76.8 Mbps. Each frame contains 512 bytes transmitted at a frame rate of 15 kHz. Each byte is split into two 4-bit nibbles with the low nibble sent first. Nibbles are 4-to-5 encoded, NRZI modulated and uplinked at 76.8 Mbps. The uplink driver generates 0.7 Vp-p signal into a 75-ohm coax cable.

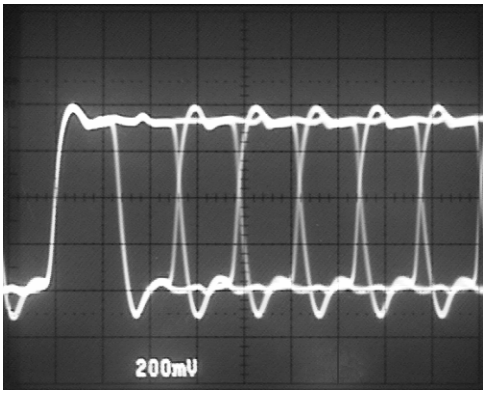

Figure 27, SeaBat 8101 Uplink Example

Table 12, Uplink Frame Format

Byte	Function
0	Frame synchronization bit pattern: J-sync followed by K-sync.
1	Various telemetry and status messages.
2	LSB of frame up-counter. Reset to zero during ping.
3	MSB of frame up-counter. Reset to zero during ping.
4	I value of receiver 0.
5	Q value of receiver 0.
6	I value of receiver 1.
7	Q value of receiver 1.
|	|
510	I value of receiver 253.
511	Q value of receiver 253.

Table 13, Uplink Encoding Scheme From 4-Bit Nibbles to 5-Bit Codes

Nibble	4-to-5 (first – last)
0000	11110
0001	01001
0010	10100
0011	10101
0100	01010
0101	01011
0110	01110
0111	01111
1000	10010
1001	10011
1010	10110
1011	10111
1100	11010
1101	11011
1110	11100
1111	11101
J-Sync	11000
K-Sync	10001

- Uplink NRZI Modulation: The non-return-to-zero invert-ones (NRZI) modulator is a flip-flop that toggles when the 4-to-5 bit is 1. This action attenuates the low-frequency component of the 4-to-5 signal, making it suitable for passage through AC-coupled uplink circuitry. The maximum cable length between the Sonar Head and the Sonar Processor is 200m. Care should be taken to ensure that all cable and connectors in the uplink path are correctly terminated and shielded. It is particularly important that a 75 ohm impedance be maintained throughout as even short impedance mis-matched lengths will cause signal degradation.

- Downlink: The downlink from the Sonar Processor to the Sonar Head commands the transceiver circuits into various states and modes. The downlink is an RS232 type signal at 19200 baud, 8-bit, 1-stop bit, no parity. Nominal amplitude is ±12V and packets are transmitted at irregular intervals. The downlink receiver is opto-isolated for protection. No more than 2ms data delay is tolerated by the transceiver.

This page intentionally left blank.

Chapter 8 – Supplemental Text

8.1 Introduction

The purpose of this chapter is to provide the operator with supplemental operating information without interrupting the normal flow of text in Chapter 3.

8.2 Depth Gates and the Head Tilt Function

8.2.1 Introduction

The Filters Menu item “Head Tilt” is used to identify a known port or starboard offset resulting from either a deliberate or accidental mounting configuration of the sonar head. Entering this offset value is required to guarantee that the depth gates will work properly with this configuration.

8.2.2 A Brief Description of Depth Gates

The depth gates, with no input from a motion sensor, will orient themselves parallel to the horizontal plane of the sonar head, as shown by the Min and MaxDepth lines in Figure 28. In this series of illustrations, the bottom detect dots are shown as a horizontal line (Line A or B) with dashed lines representing depth gates above and below the bottom and no vessel roll present. Visualize the bottom as being in the ‘layer’ formed by the depth gates.

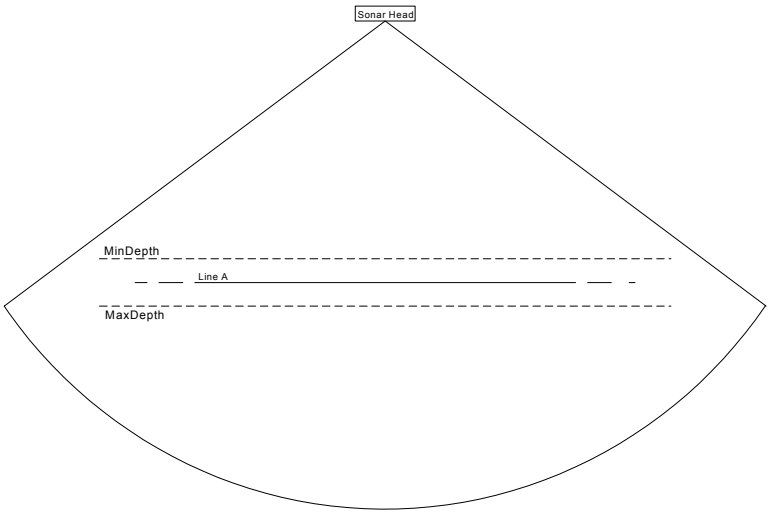

Figure 28, Depth Gates, With No Roll

Figure 29 shows the same bottom image with a small roll value to port. Notice that the ends of the swath have been cut off due to the action of the static (no

motion sensor applied) depth gates. In this figure, and all remaining figures in this discussion, the bottom is flat.

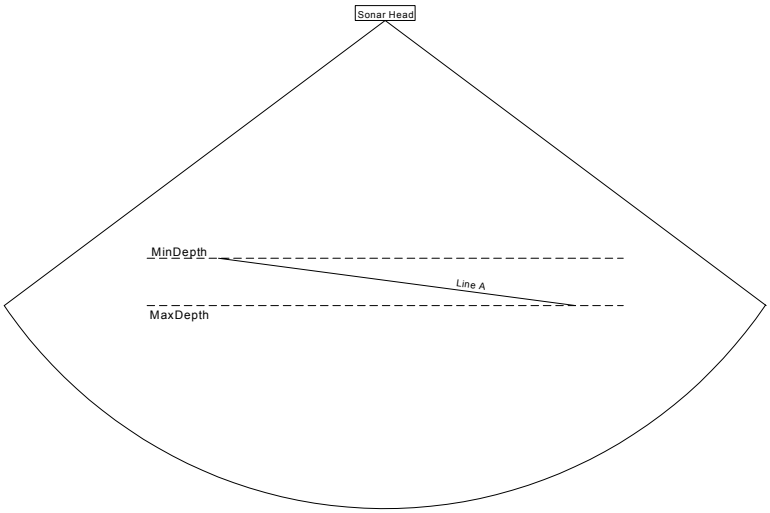

Figure 29, Depth Gates, With Roll

When controlled by a motion sensor, the depth gates will be parallel to the local horizontal plane of the earth even as the vessel rolls. Figure 30 shows the same bottom image with dynamic depth gates applied.

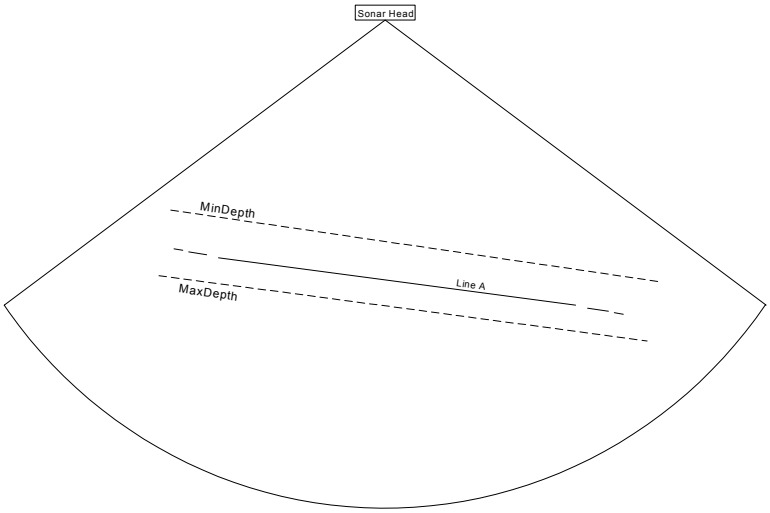

Figure 30, Depth Gates, With Roll and Motion Sensor Input

8.2.3 Offset Mounting of the Sonar Head

In the case of a Sonar Head mounted so as to look at a river bank and under wharf structures, this discussion assumes a thirty degree offset to starboard. If the offset value of this mounting configuration is not identified properly, the ends of the swath may be cut off by one, or both, of the depth gates intersecting the bottom display even when a motion sensor is used.

In Figure 31, Line B represents the bottom as shown by a sonar head mounted thirty degrees offset looking to starboard. In this illustration, the depth gates are reacting properly to the motion sensor input, however, since the offset value of head tilt has not been added the only area of this new swath that will be visible is within the small box; everything else will be removed by the action of the depth gates.

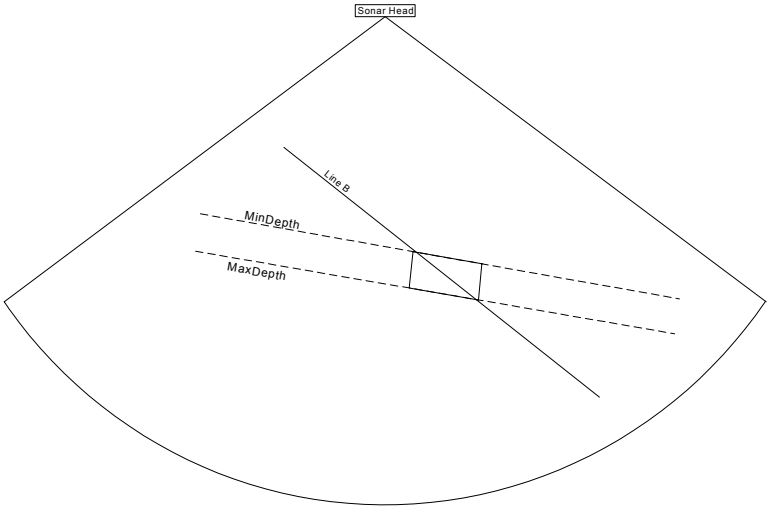

Figure 31, Depth Gates, With No Offset

8.2.4 Using the Head Tilt Function

However, if the degree of offset (thirty degrees for this discussion) is entered at the Head Tilt menu item, the layer formed by the depth gates will be rotated by the same thirty degrees, as shown in Figure 32. For this discussion, the operator must enter minus numbers for a starboard offset and positive numbers for port.

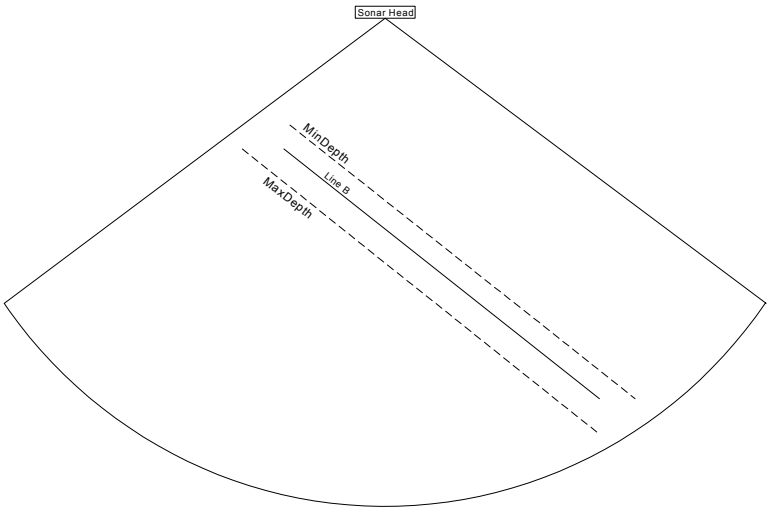

Figure 32, Depth Gates, With Offset

Chapter 9 - Support Documentation

9.1 Introduction

This chapter serves as a collection point for supplemental engineering drawings and is intended for use by installers and/or maintenance personnel.

9.2 List of Support Documents

The following documents are included:

8101 System:

Sonar Head:

Mounting Hardware:

Cables:

Cables, Out of Production:

The Out of Production drawings are supplied to support those installations that have updated software but have retained the original hardware.

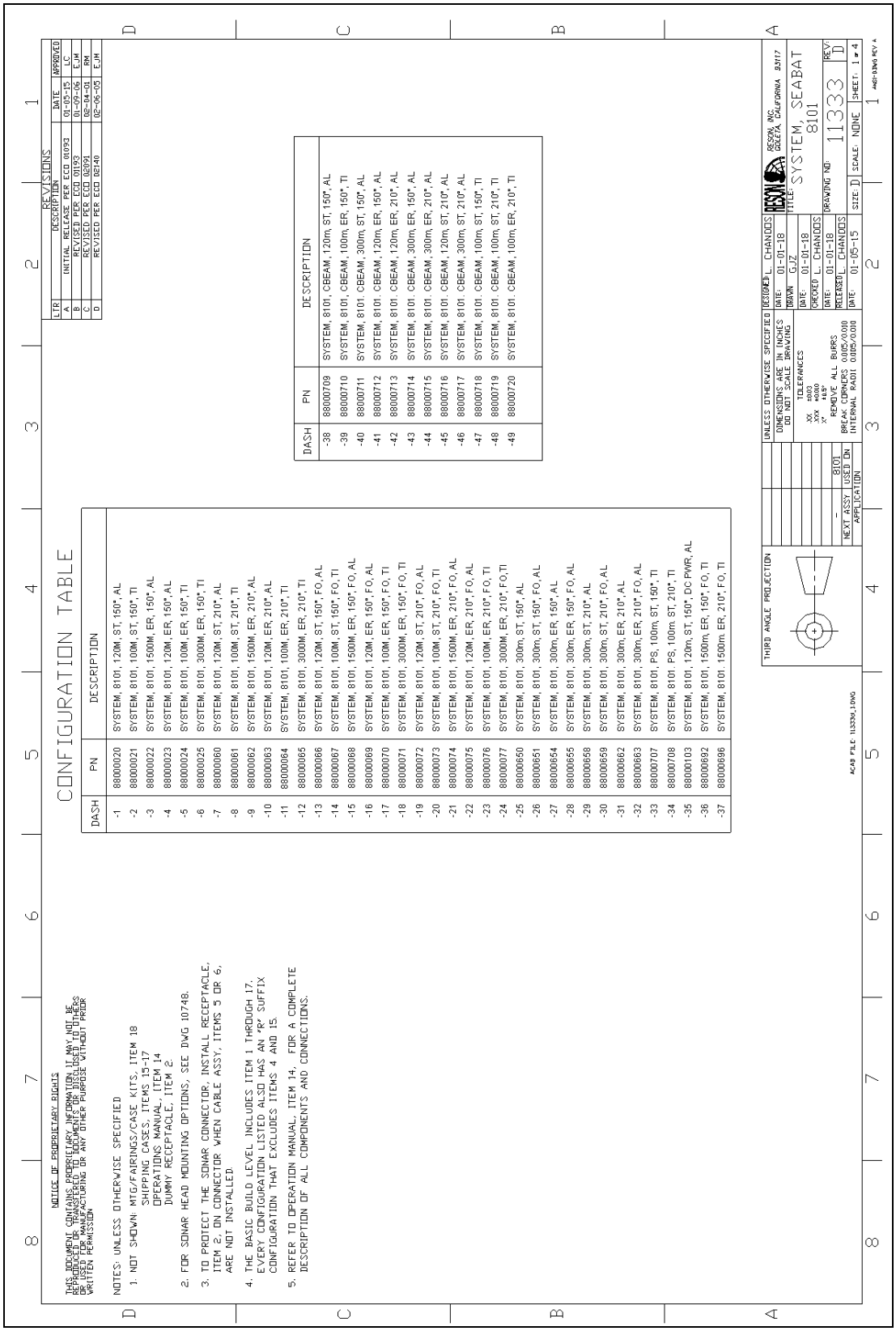

NOTICE OF PROPRIETARY RIGHTS

THIS DOCUMENT CONTAINS PROPRIETARY INFORMATION IT MAY NOT BE REPRODUCED OR TRANSFERRED TO DOCUMENTS OR DISCLOSED TO OTHERS WITHOUT PRIOR WRITTEN PERMISSION FOR MANUFACTURING OR ANY OTHER PURPOSE

NOTES: UNLESS OTHERWISE SPECIFIED

1. NOT SHOWN: MTG/FAIRINGS/CASE KITS, ITEM 18
   SHIPPING CASES, ITEMS 15-17
   OPERATIONS MANUAL, ITEM 14
   DUMMY RECEPTACLE, ITEM 2
2. FOR SONAR HEAD MOUNTING OPTIONS, SEE DWG 10748.
3. TO PROTECT THE SONAR CONNECTOR, INSTALL RECEPTACLE, ITEM 2. ON CONNECTOR WHEN CABLE ASSY, ITEMS 5 OR 6, ARE NOT INSTALLED.
4. THE BASIC BUILD LEVEL INCLUDES ITEM 1 THROUGH 17. EVERY CONFIGURATION LISTED ALSO HAS AN "R" SUFFIX CONFIGURATION THAT EXCLUDES ITEMS 4 AND 15.
5. REFER TO OPERATION MANUAL, ITEM 14, FOR A COMPLETE DESCRIPTION OF ALL COMPONENTS AND CONNECTIONS.

CONFIGURATION TABLE

DASH	PN	DESCRIPTION
-1	88000020	SYSTEM, 8101, 120M, ST, 150°, AL
-2	88000021	SYSTEM, 8101, 100M, ST, 150°, TI
-3	88000022	SYSTEM, 8101, 1500M, ER, 150°, AL
-4	88000023	SYSTEM, 8101, 120M, ER, 150°, AL
-5	88000024	SYSTEM, 8101, 100M, ER, 150°, TI
-6	88000025	SYSTEM, 8101, 3000M, ER, 150°, TI
-7	88000060	SYSTEM, 8101, 120M, ST, 210°, AL
-8	88000061	SYSTEM, 8101, 100M, ST, 210°, TI
-9	88000062	SYSTEM, 8101, 1500M, ER, 210°, AL
-10	88000063	SYSTEM, 8101, 120M, ER, 210°, AL
-11	88000064	SYSTEM, 8101, 100M, ER, 210°, TI
-12	88000065	SYSTEM, 8101, 3000M, ER, 210°, TI
-13	88000066	SYSTEM, 8101, 120M, ST, 150°, FO, AL
-14	88000067	SYSTEM, 8101, 100M, ST, 150°, FO, TI
-15	88000068	SYSTEM, 8101, 1500M, ER, 150°, FO, AL
-16	88000069	SYSTEM, 8101, 120M, ER, 150°, FO, AL
-17	88000070	SYSTEM, 8101, 100M, ER, 150°, FO, TI
-18	88000071	SYSTEM, 8101, 3000M, ER, 150°, FO, TI
-19	88000072	SYSTEM, 8101, 120M, ST, 210°, FO, AL
-20	88000073	SYSTEM, 8101, 100M, ST, 210°, FO, TI
-21	88000074	SYSTEM, 8101, 1500M, ER, 210°, FO, AL
-22	88000075	SYSTEM, 8101, 120M, ER, 210°, FO, AL
-23	88000076	SYSTEM, 8101, 100M, ER, 210°, FO, TI
-24	88000077	SYSTEM, 8101, 3000M, ER, 210°, FO,TI
-25	88000650	SYSTEM, 8101, 300m, ST, 150°, AL
-26	88000651	SYSTEM, 8101, 300m, ST, 150°, FO, AL
-27	88000654	SYSTEM, 8101, 300m, ER, 150°, AL
-28	88000655	SYSTEM, 8101, 300m, ER, 150°, FO, AL
-29	88000658	SYSTEM, 8101, 300m, ST, 210°, AL
-30	88000659	SYSTEM, 8101, 300m, ST, 210°, FO, AL
-31	88000662	SYSTEM, 8101, 300m, ER, 210°, AL
-32	88000663	SYSTEM, 8101, 300m, ER, 210°, FO, AL
-33	88000707	SYSTEM, 8101, PS, 100m, ST, 150°, TI
-34	88000708	SYSTEM, 8101 PS, 100m, ST, 210°, TI
-35	88000103	SYSTEM, 8101, 120m, ST, 150°, DC PWR, AL
-36	88000692	SYSTEM, 8101, 1500m, ER, 150°, FO, TI
-37	88000696	SYSTEM, 8101, 1500m, ER, 210°, FO, TI
-38	88000709	SYSTEM, 8101, CBEAM, 120m, ST, 150°, AL
-39	88000710	SYSTEM, 8101, CBEAM, 100m, ER, 150°, TI
-40	88000711	SYSTEM, 8101, CBEAM, 300m, ST, 150°, AL
-41	88000712	SYSTEM, 8101, CBEAM, 120m, ER, 150°, AL
-42	88000713	SYSTEM, 8101, CBEAM, 120m, ER, 210°, AL
-43	88000714	SYSTEM, 8101, CBEAM, 300m, ER, 150°, AL
-44	88000715	SYSTEM, 8101, CBEAM, 300m, ER, 210°, AL
-45	88000716	SYSTEM, 8101, CBEAM, 120m, ST, 210°, AL
-46	88000717	SYSTEM, 8101, CBEAM, 300m, ST, 210°, AL
-47	88000718	SYSTEM, 8101, CBEAM, 100m, ST, 150°, TI
-48	88000719	SYSTEM, 8101, CBEAM, 100m, ST, 210°, TI
-49	88000720	SYSTEM, 8101, CBEAM, 100m, ER, 210°, TI

REVISIONS

LTR	DESCRIPTION	DATE	APPROVED
A	INITIAL RELEASE PER ECO 01093	01-05-15	LC
B	REVISED PER ECO 01193	01-09-06	EJM
C	REVISED PER ECO 02091	02-04-01	RM
D	REVISED PER ECO 02140	02-06-05	EJM

THIRD ANGLE PROJECTION

UNLESS OTHERWISE SPECIFIED
DIMENSIONS ARE IN INCHES
DO NOT SCALE DRAWING
TOLERANCES
.XX ±0.03
.XXX ±0.010
X° ±1.5°
REMOVE ALL BURRS
BREAK CORNERS 0.005/0.030
INTERNAL RADII 0.005/0.030

DESIGNED L. CHANDOS DATE 01-01-18
DRAWN GJZ
DATE 01-01-18
CHECKED L. CHANDOS
DATE 01-01-18
RELEASED L. CHANDOS
DATE 01-05-15

RESON, INC. GOLETA, CALIFORNIA 93117

TITLE: SYSTEM, SEABAT 8101

DRAWING NO 11333 REV D

SIZE D SCALE NONE SHEET 1 of 4

NEXT ASSY 8101
USED ON
APPLICATION

ACAD FILE 11333A.DWG

Figure 33, SeaBat 8101 System, Sheet 1

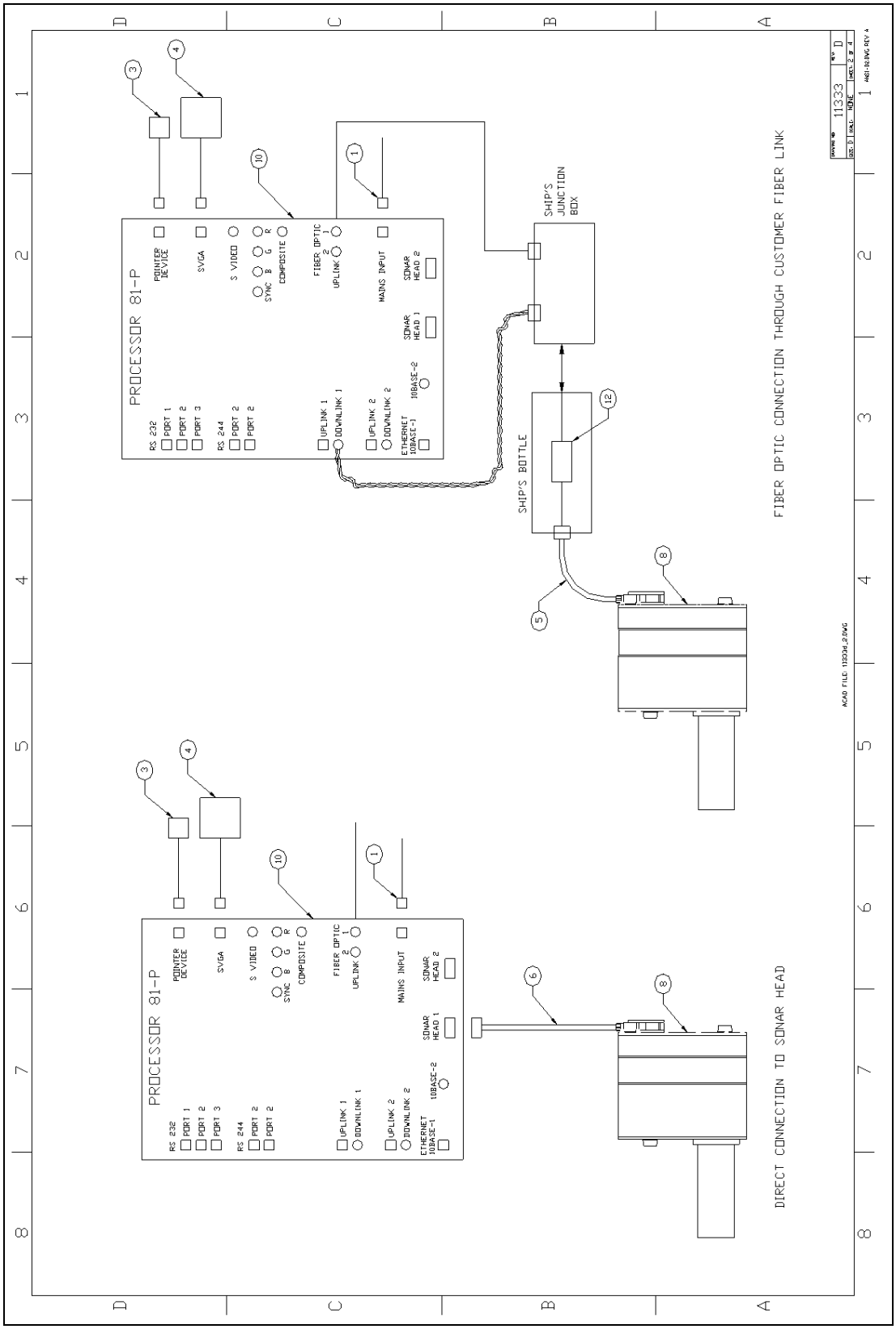

Figure 34, SeaBat 8101 System, Sheet 2

-37	-36	-35	-34	-33	-32	-31	-30	-29	-28	-27	-26	-25	-24	-23	-22	-21	-20	-19	-18	-17	-16	-15	-14	-13	-12	-11	-10	-9	-8	-7	-6	-5	-4	-3	-2	-1	PART NUMBER	DESCRIPTION	ITEM	LEVEL
1	1	1	1	1	1	1	1	1	1	1	1	1	1	1	1	1	1	1	1	1	1	1	1	1	1	1	1	1	1	1	1	1	1	1	1	1	89100009	SHIP CASE, STENCILED, PROCESSOR, 81P	17	0
1	1	-	-	-	1	1	-	-	1	1	-	-	1	1	1	1	1	-	1	1	1	1	-	-	1	1	1	1	-	-	1	1	1	1	-	-	89100015	SHIP CASE, STENCILED, 8101 ER SONAR HEAD	16	0
-	-	1	1	1	-	-	1	1	-	-	1	1	-	-	-	-	1	1	-	-	-	-	1	1	-	-	-	-	1	1	-	-	-	-	1	1	89100008	SHIP CASE, STENCILED, STICK HEAD, 8101		
[1]	[1]	[1]	[1]	[1]	[1]	[1]	[1]	[1]	[1]	[1]	[1]	[1]	[1]	[1]	[1]	[1]	[1]	[1]	[1]	[1]	[1]	[1]	[1]	[1]	[1]	[1]	[1]	[1]	[1]	[1]	[1]	[1]	[1]	[1]	[1]	[1]	89100006	SHIP CASE, STENCILED, 81-P/604x MONITOR [NOTE 4]	15	0
2	2	2	2	2	2	2	2	2	2	2	2	2	2	2	2	2	2	2	2	2	2	2	2	2	2	2	2	2	2	2	2	2	2	2	2	2	86010009	MANUAL, OPERATION, 8101, HARD COVER	14	0
																																							13	0
1	1	-	-	-	1	-	1	-	1	-	1	-	1	1	1	1	1	1	1	1	1	1	1	1	-	-	-	-	-	-	-	-	-	-	-	-	85105001	ASSY, COAX TO FIBER OPTIC CONVERTER	12	0
																																							11	0
-	-	1	-	-	-	-	-	-	-	-	-	-	-	-	-	-	-	-	-	-	-	-	-	-	-	-	-	-	-	-	-	-	-	-	-	-	85108012	ASSY, 8101 PROC., 150°, W/ DC PWR	10	0
1	-	-	-	-	1	-	1	-	-	-	-	-	1	1	1	1	1	1	-	-	-	-	-	-	-	-	-	-	-	-	-	-	-	-	-	-	85108005	ASSY, 8101 PROC., 210°, W/ FIBER OPTIC		
-	1	-	-	-	-	-	-	-	1	-	1	-	-	-	-	-	-	-	1	1	1	1	1	1	-	-	-	-	-	-	-	-	-	-	-	-	85108004	ASSY, 8101 PROC., 150°, W/ FIBER OPTIC		
-	-	-	1	1	-	1	-	1	-	-	-	-	-	-	-	-	-	-	-	-	-	-	-	-	1	1	1	1	1	1	-	-	-	-	-	-	85108003	ASSY, 8101 PROC., 210°, NO FIBER OPTIC		
-	-	-	-	-	-	-	-	-	-	1	-	1	-	-	-	-	-	-	-	-	-	-	-	-	-	-	-	-	-	-	1	1	1	1	1	1	85108002	ASSY, 8101 PROC., 150°, NO FIBER OPTIC		
																																							9	0
1	-	-	-	-	-	-	-	-	-	-	-	-	-	-	-	-	-	-	-	-	-	-	-	-	-	-	-	-	-	-	-	-	-	-	-	-	85100137	ASSY, 8101 SONAR, 210°, 1500M ER, TI G5	8	0
-	1	-	-	-	-	-	-	-	-	-	-	-	-	-	-	-	-	-	-	-	-	-	-	-	-	-	-	-	-	-	-	-	-	-	-	-	85100136	ASSY, 8101 SONAR, 150°, 1500M ER, TI G5		
-	-	-	1	-	-	-	-	-	-	-	-	-	-	-	-	-	-	-	-	-	-	-	-	-	-	-	-	-	-	-	-	-	-	-	-	-	85100216	ASSY, 8101 SONAR, 210°, 100M STEERABLE, TI		
-	-	-	-	1	-	-	-	-	-	-	-	-	-	-	-	-	-	-	-	-	-	-	-	-	-	-	-	-	-	-	-	-	-	-	-	-	85100215	ASSY, 8101 SONAR, 150°, 100M STEERABLE, TI		
-	-	-	-	-	1	1	-	-	-	-	-	-	-	-	-	-	-	-	-	-	-	-	-	-	-	-	-	-	-	-	-	-	-	-	-	-	85100208	ASSY, 8101 SONAR, 210°, 300M ER, AL		
-	-	-	-	-	-	-	-	-	1	1	-	-	-	-	-	-	-	-	-	-	-	-	-	-	-	-	-	-	-	-	-	-	-	-	-	-	85100207	ASSY, 8101 SONAR, 150°, 300M ER, AL		
-	-	-	-	-	-	-	1	1	-	-	-	-	-	-	-	-	-	-	-	-	-	-	-	-	-	-	-	-	-	-	-	-	-	-	-	-	85100206	ASSY, 8101 SONAR, 210°, 300M ST, AL		
-	-	-	-	-	-	-	-	-	-	-	1	1	-	-	-	-	-	-	-	-	-	-	-	-	-	-	-	-	-	-	-	-	-	-	-	-	85100205	ASSY, 8101 SONAR, 150°, 300M ST, AL		
-	-	-	-	-	-	-	-	-	-	-	-	-	1	-	-	-	-	-	-	-	-	-	-	-	1	-	-	-	-	-	-	-	-	-	-	-	85100135	ASSY, 8101 SONAR, 210°, 3000M ER, TI		
-	-	-	-	-	-	-	-	-	-	-	-	-	-	1	-	-	-	-	-	-	-	-	-	-	-	1	-	-	-	-	-	-	-	-	-	-	85100134	ASSY, 8101 SONAR, 210°, 100M ER, TI		
-	-	-	-	-	-	-	-	-	-	-	-	-	-	-	-	-	1	-	-	-	-	-	-	-	-	-	-	-	1	-	-	-	-	-	-	-	85100133	ASSY, 8101 SONAR, 210°, 100M STICK, TI		
-	-	-	-	-	-	-	-	-	-	-	-	-	-	-	-	1	-	-	-	-	-	-	-	-	-	-	-	1	-	-	-	-	-	-	-	-	85100132	ASSY, 8101 SONAR, 210°, 1500M ER, AL		
-	-	-	-	-	-	-	-	-	-	-	-	-	-	-	1	-	-	-	-	-	-	-	-	-	-	-	1	-	-	-	-	-	-	-	-	-	85100131	ASSY, 8101 SONAR, 210°, 120M ER, AL		
-	-	-	-	-	-	-	-	-	-	-	-	-	-	-	-	-	-	1	-	-	-	-	-	-	-	-	-	-	-	1	-	-	-	-	-	-	85100130	ASSY, 8101 SONAR, 210°, 120M STICK, AL		
-	-	-	-	-	-	-	-	-	-	-	-	-	-	-	-	-	-	-	-	1	-	-	-	-	-	-	-	-	-	-	-	1	-	-	-	-	85100127	ASSY, 8101 SONAR, 150°, 100M ER, TI		
-	-	-	-	-	-	-	-	-	-	-	-	-	-	-	-	-	-	-	-	-	-	1	-	-	-	-	-	-	-	-	-	-	-	1	-	-	85100126	ASSY,8101 SONAR, 150°, 1500M ER, AL		
-	-	-	-	-	-	-	-	-	-	-	-	-	-	-	-	-	-	-	1	-	-	-	-	-	-	-	-	-	-	-	1	-	-	-	-	-	85100124	ASSY,8101 SONAR, 150°, 3000M ER, TI G5		
-	-	-	-	-	-	-	-	-	-	-	-	-	-	-	-	-	-	-	-	-	1	-	-	-	-	-	-	-	-	-	-	-	1	-	-	-	85100123	ASSY, 8101 SONAR, 150°, 120M ER, AL		
-	-	-	-	-	-	-	-	-	-	-	-	-	-	-	-	-	-	-	-	-	-	-	1	-	-	-	-	-	-	-	-	-	-	-	1	-	85100121	ASSY, 8101 SONAR, 150°, 100M STICK, TI		
-	-	1	-	-	-	-	-	-	-	-	-	-	-	-	-	-	-	-	-	-	-	-	-	1	-	-	-	-	-	-	-	-	-	-	-	1	85100120	ASSY, 8101 SONAR, 150°, 120M STICK, AL		
																																							7	0
1	1	1	1	1	1	1	1	1	1	1	1	1	1	1	1	1	1	1	1	1	1	1	1	1	1	1	1	1	1	1	1	1	1	1	1	1	85000650	CABLE ASSY, PR-HD, SHLD, 8101/9K, 25m	6	0
1	1	-	-	-	1	-	1	-	1	-	1	-	1	1	1	1	1	1	1	1	1	1	1	1	-	-	-	-	-	-	-	-	-	-	-	-	85000649	CABLE ASSY, PIGTAIL, SHLD, 8101/9K, 3m	5	0
[1]	[1]	[1]	[1]	[1]	[1]	[1]	[1]	[1]	[1]	[1]	[1]	[1]	[1]	[1]	[1]	[1]	[1]	[1]	[1]	[1]	[1]	[1]	[1]	[1]	[1]	[1]	[1]	[1]	[1]	[1]	[1]	[1]	[1]	[1]	[1]	[1]	85000184	MONITOR, 15in, SVGA, 81-P/604x [NOTE 4]	4	0
1	1	1	1	1	1	1	1	1	1	1	1	1	1	1	1	1	1	1	1	1	1	1	1	1	1	1	1	1	1	1	1	1	1	1	1	1	85000149	TRACKBALL, 3-BUTTON, SERIAL, MODIFIED	3	0
1	1	1	1	1	1	1	1	1	1	1	1	1	1	1	1	1	1	1	1	1	1	1	1	1	1	1	1	1	1	1	1	1	1	1	1	1	64500006	RECEPTACLE, DUMMY, 9-SKT	2	0
-	-	1	-	-	-	-	-	-	-	-	-	-	-	-	-	-	-	-	-	-	-	-	-	-	-	-	-	-	-	-	-	-	-	-	-	-	85000901	CABLE ASSY, DC PWR PIGTAIL, 81-P, 6′	1	0
1	1	-	1	1	1	1	1	1	1	1	1	1	1	1	1	1	1	1	1	1	1	1	1	1	1	1	1	1	1	1	1	1	1	1	1	1	60000002	CORD, PWR 3-COND, NEMA 5-15P TO IEC		

QTY REQD

PARTS LIST

ACAD FILE: 11333d_3.DWG

DRAWING NO 11333 REV: D
SIZE D SCALE: NONE SHEET: 3 OF 4

ANSI-D2.DWG REV A

Figure 35, SeaBat 8101 System, Sheet 3

-58	-57	-56	-55	-54	-53	-52	-51	-50	-49	-48	-47	-46	-45	-44	-43	-42	-41	-40	-39	-38	PART NUMBER	DESCRIPTION	ITEM	LEVEL
									1	1	1	1	1	1	1	1	1	1	1	1	89100009	SHIP CASE, STENCILED, PROCESSOR, 81P	17	0
									1	-	-	-	-	1	1	1	1	-	1	-	89100015	SHIP CASE, STENCILED, 8101 ER SONAR HEAD	16	0
									-	1	1	1	1	-	-	-	-	1	-	1	89100008	SHIP CASE, STENCILED, STICK HEAD, 8101		
									[1]	[1]	[1]	[1]	[1]	[1]	[1]	[1]	[1]	[1]	[1]	[1]	89100006	SHIP CASE, STENCILED, 81-P/604x MONITOR [NOTE 4]	15	0
									2	2	2	2	2	2	2	2	2	2	2	2	86010009	MANUAL, OPERATION, 8101, HARD COVER	14	0
																							13	0
									-	-	-	-	-	-	-	-	-	-	-	-	85105001	ASSY, COAX TO FIBER OPTIC CONVERTER	12	0
																							11	0
									-	-	-	-	-	-	-	-	-	-	-	-	85108012	ASSY, 8101 PROC., 150°, W/ DC PWR	10	0
									-	-	-	-	-	-	-	-	-	-	-	-	85108005	ASSY, 8101 PROC., 210°, W/ FIBER OPTIC		
									-	-	-	-	-	-	-	-	-	-	-	-	85108004	ASSY, 8101 PROC., 150°, W/ FIBER OPTIC		
									1	1	-	1	1	1	-	1	-	-	-	-	85108007	ASSY, 8101 PROC., 210°, NO FIBER OPTIC, ANALOG OUTPUT		
									-	-	1	-	-	-	1	-	1	1	1	1	85108006	ASSY, 8101 PROC., 150°, NO FIBER OPTIC, ANALOG OUTPUT		
																							9	0
									-	-	-	-	-	-	-	-	-	-	-	-	85100137	ASSY, 8101 SONAR, 210°, 1500M ER, TI G5	8	0
									-	-	-	-	-	-	-	-	-	-	-	-	85100136	ASSY, 8101 SONAR, 150°, 1500M ER, TI G5		
									-	-	-	-	-	-	-	-	-	-	-	-	85100216	ASSY, 8101 SONAR, 210°, 100M STEERABLE, TI		
									-	-	-	-	-	-	-	-	-	-	-	-	85100215	ASSY, 8101 SONAR, 150°, 100M STEERABLE, TI		
									-	-	-	-	-	1	-	-	-	-	-	-	85100208	ASSY, 8101 SONAR, 210°, 300M ER, AL		
									-	-	-	-	-	-	1	-	-	-	-	-	85100207	ASSY, 8101 SONAR, 150°, 300M ER, AL		
									-	-	-	1	-	-	-	-	-	-	-	-	85100206	ASSY, 8101 SONAR, 210°, 300M ST, AL		
									-	-	-	-	-	-	-	-	-	1	-	-	85100205	ASSY, 8101 SONAR, 150°, 300M ST, AL		
									-	-	-	-	-	-	-	-	-	-	-	-	85100135	ASSY, 8101 SONAR, 210°, 3000M ER, TI		
									1	-	-	-	-	-	-	-	-	-	-	-	85100134	ASSY, 8101 SONAR, 210°, 100M ER, TI		
									-	1	-	-	-	-	-	-	-	-	-	-	85100133	ASSY, 8101 SONAR, 210°, 100M STICK, TI		
									-	-	-	-	-	-	-	-	-	-	-	-	85100132	ASSY, 8101 SONAR, 210°, 1500M ER, AL		
									-	-	-	-	-	-	-	1	-	-	-	-	85100131	ASSY, 8101 SONAR, 210°, 120M ER, AL		
									-	-	-	-	1	-	-	-	-	-	-	-	85100130	ASSY, 8101 SONAR, 210°, 120M STICK, AL		
									-	-	-	-	-	-	-	-	-	-	1	-	85100127	ASSY, 8101 SONAR, 150°, 100M ER, TI		
									-	-	-	-	-	-	-	-	-	-	-	-	85100126	ASSY,8101 SONAR, 150°, 1500M ER, AL		
									-	-	-	-	-	-	-	-	-	-	-	-	85100124	ASSY,8101 SONAR, 150°, 3000M ER, TI G5		
									-	-	-	-	-	-	-	-	1	-	-	-	85100123	ASSY, 8101 SONAR, 150°, 120M ER, AL		
									-	-	1	-	-	-	-	-	-	-	-	-	85100121	ASSY, 8101 SONAR, 150°, 100M STICK, TI		
									-	-	-	-	-	-	-	-	-	-	-	1	85100120	ASSY, 8101 SONAR, 150°, 120M STICK, AL		
																							7	0
									1	1	1	1	1	1	1	1	1	1	1	1	85000650	CABLE ASSY, PR-HD, SHLD, 8101/9K, 25m	6	0
									-	-	-	-	-	-	-	-	-	-	-	-	85000649	CABLE ASSY, PIGTAIL, SHLD, 8101/9K, 3m	5	0
									[1]	[1]	[1]	[1]	[1]	[1]	[1]	[1]	[1]	[1]	[1]	[1]	85000184	MONITOR, 15in, SVGA, 81-P/604x [NOTE 4]	4	0
									1	1	1	1	1	1	1	1	1	1	1	1	85000149	TRACKBALL, 3-BUTTON, SERIAL, MODIFIED	3	0
									1	1	1	1	1	1	1	1	1	1	1	1	64500006	RECEPTACLE, DUMMY, 9-SKT	2	0
									-	-	-	-	-	-	-	-	-	-	-	-	85000901	CABLE ASSY, DC PWR PIGTAIL, 81-P, 6'	1	0
									1	1	1	1	1	1	1	1	1	1	1	1	60000002	CORD, PWR 3-COND, NEMA 5-15P TO IEC		

QTY REQD

PARTS LIST

ACAD FILE: 11333d_4.DWG

DRAWING NO	11333	REV	D
SIZE D	SCALE NONE	SHEET 4 OF 4	

ANSI-D2.DWG REV A

Figure 36, SeaBat 8101 System, Sheet 4

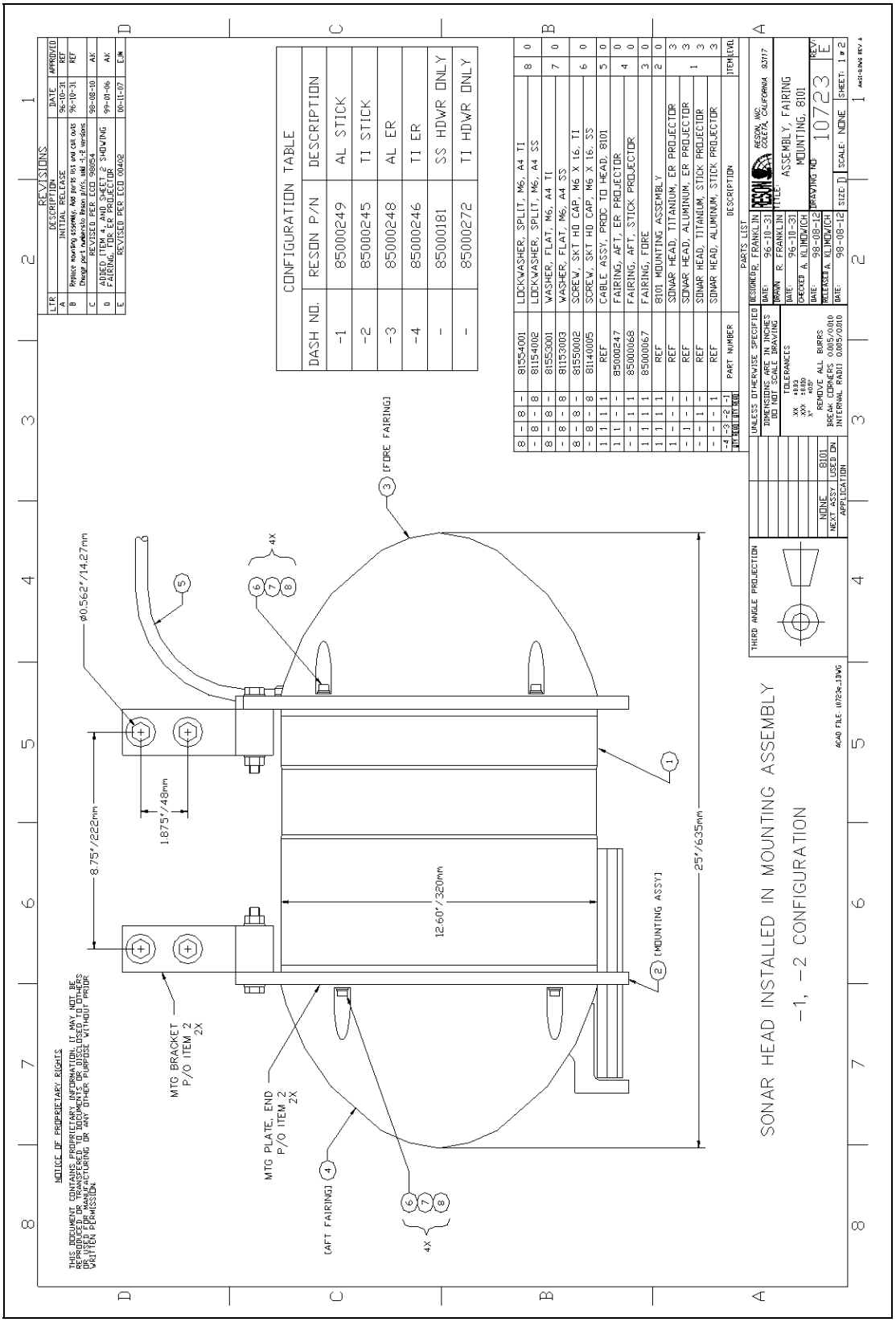

Figure 37, Sonar Head Assembly, With Fairing, Sheet 1

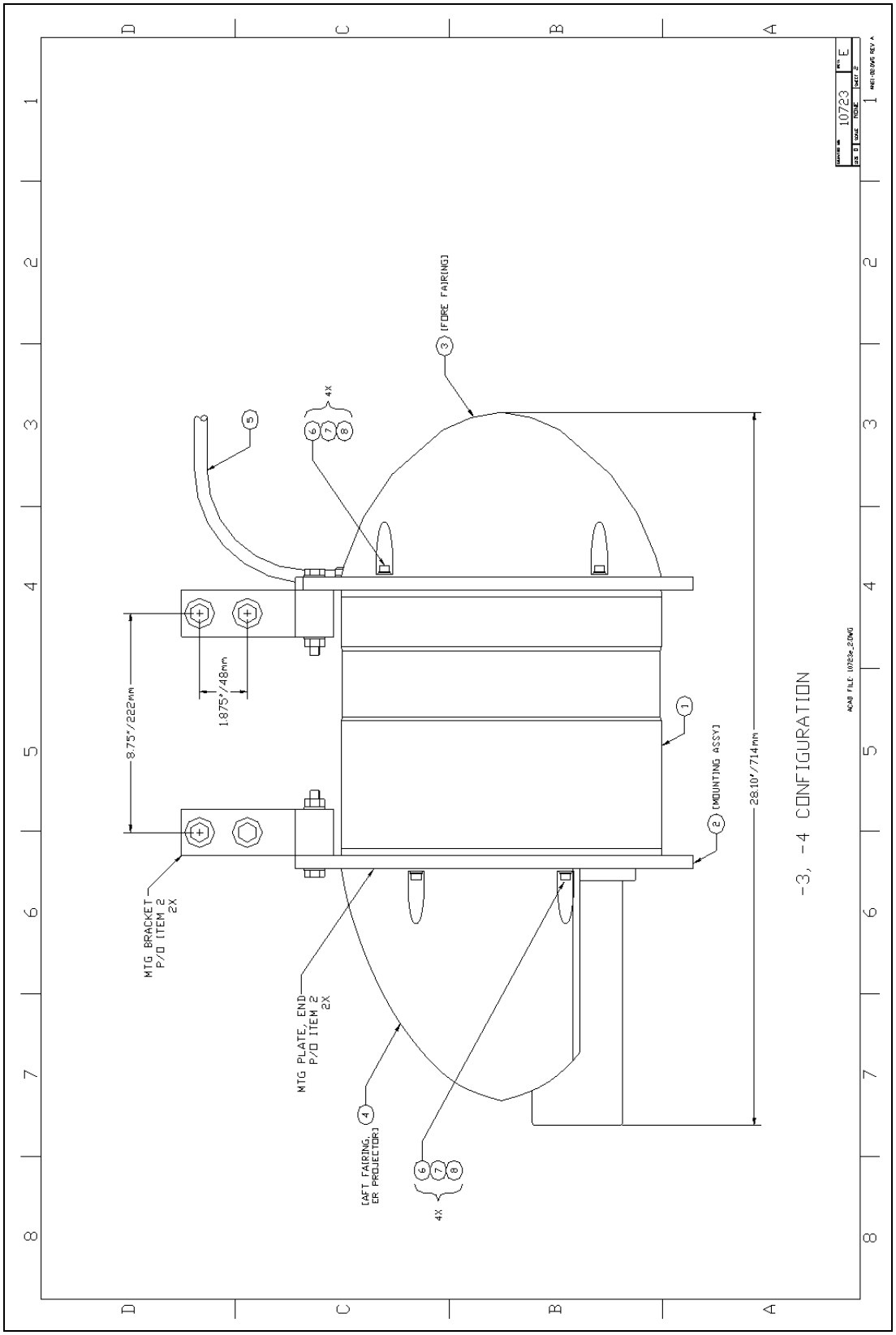

Figure 38, Sonar Head Assembly, With Fairing, Sheet 2

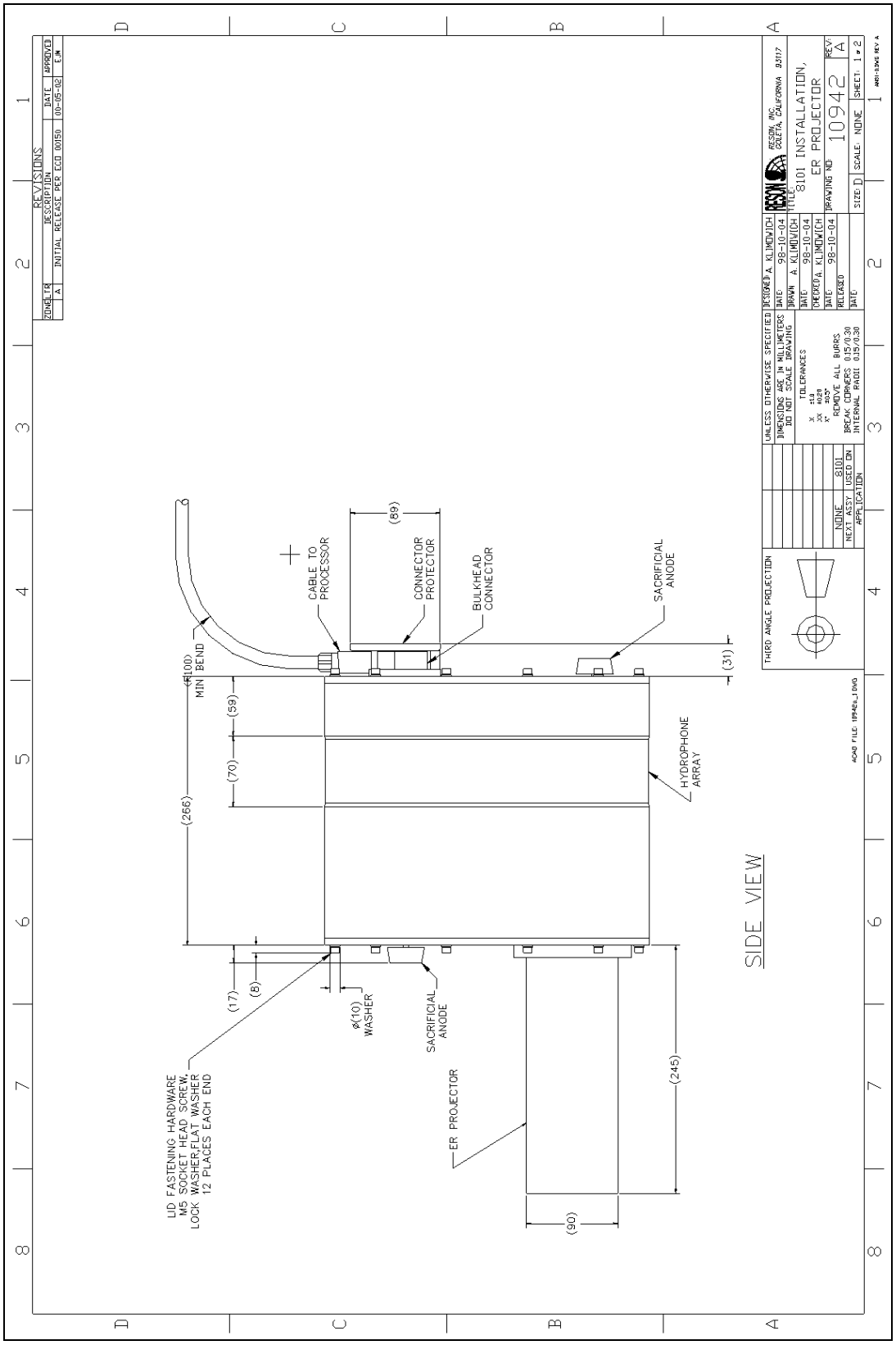

Figure 39, ER Projector, Installation, Sheet 1

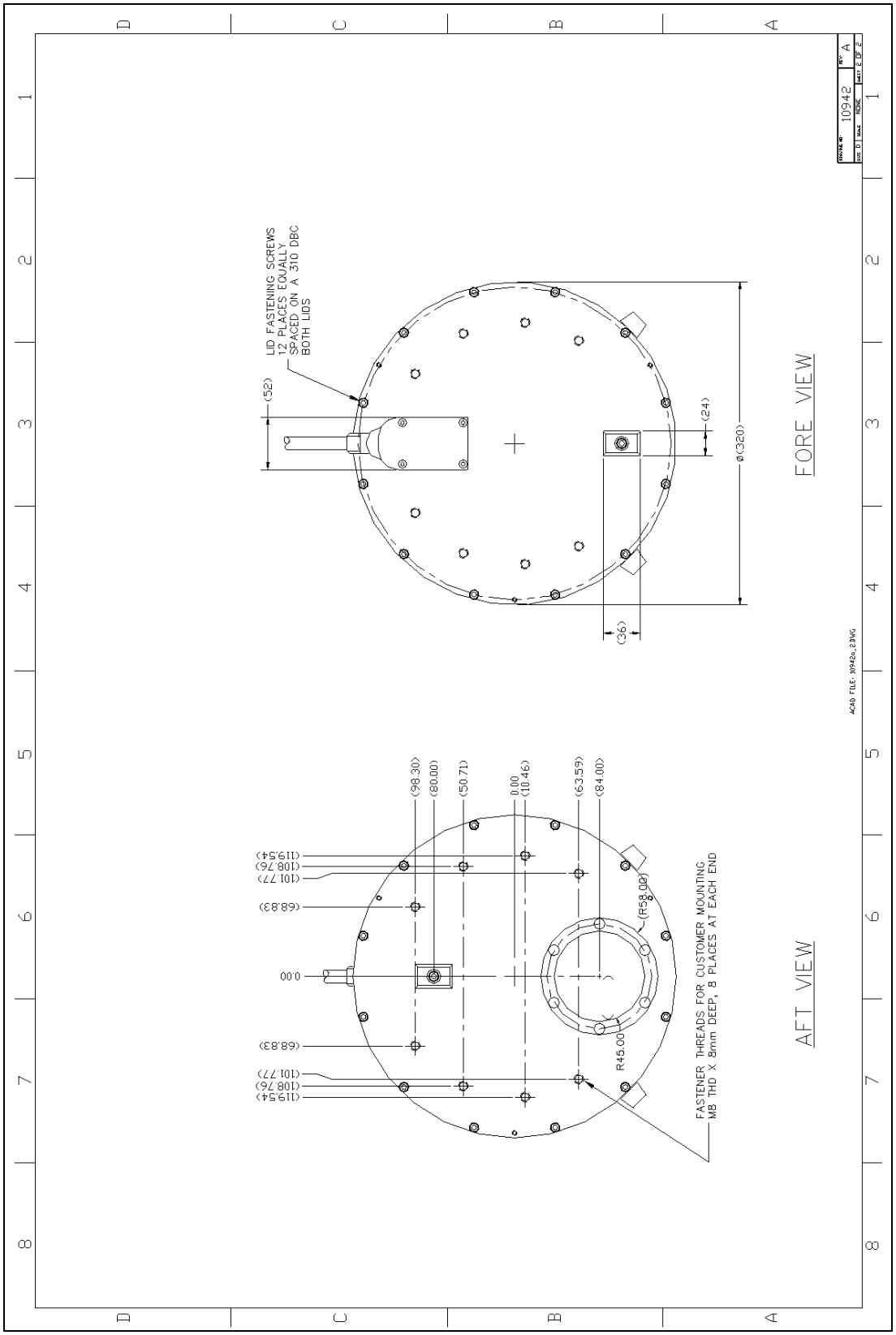

Figure 40, ER Projector, Installation, Sheet 2

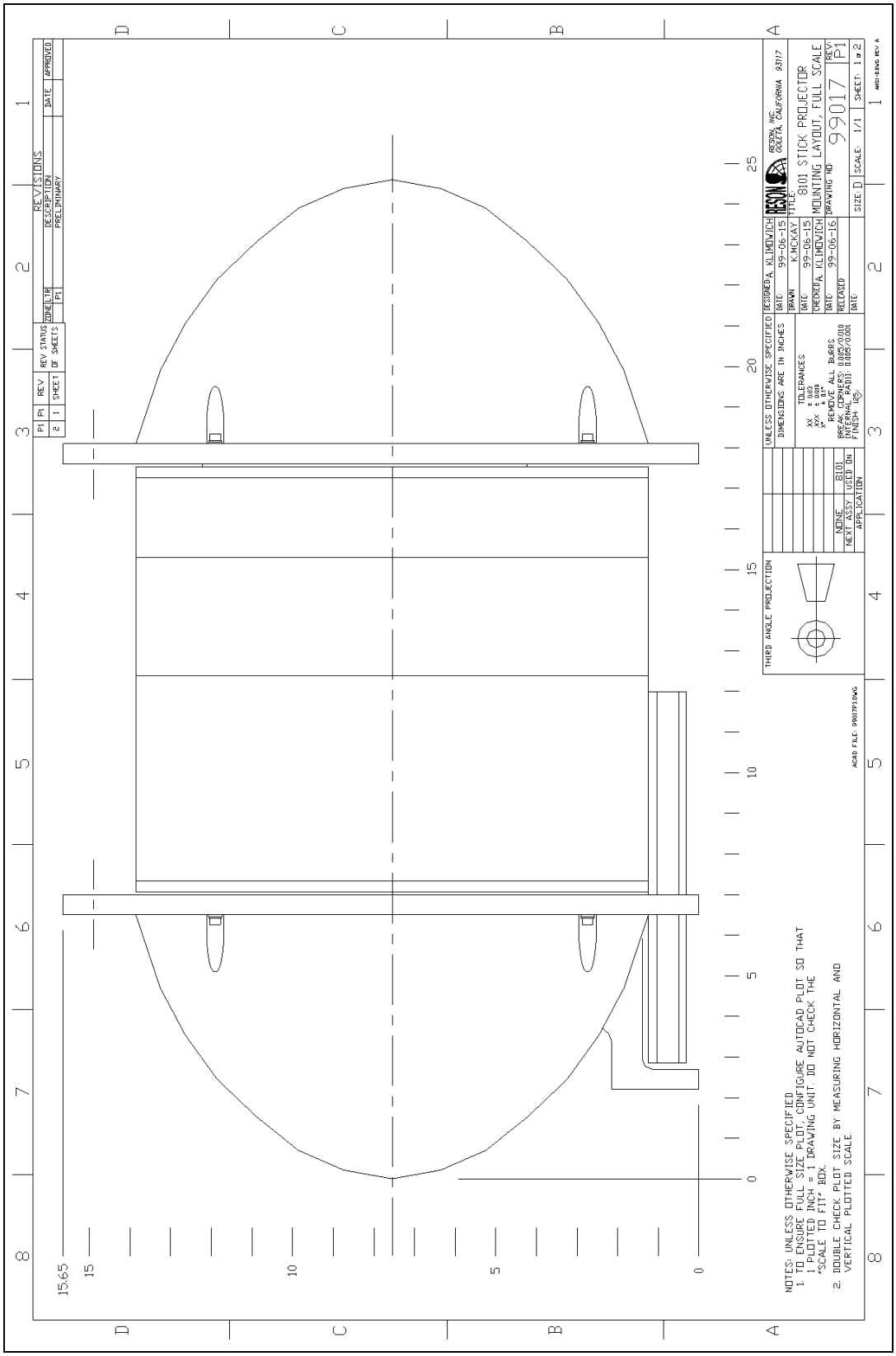

Figure 41, Sonar Head, Scaled Mounting Layout, Sheet 1

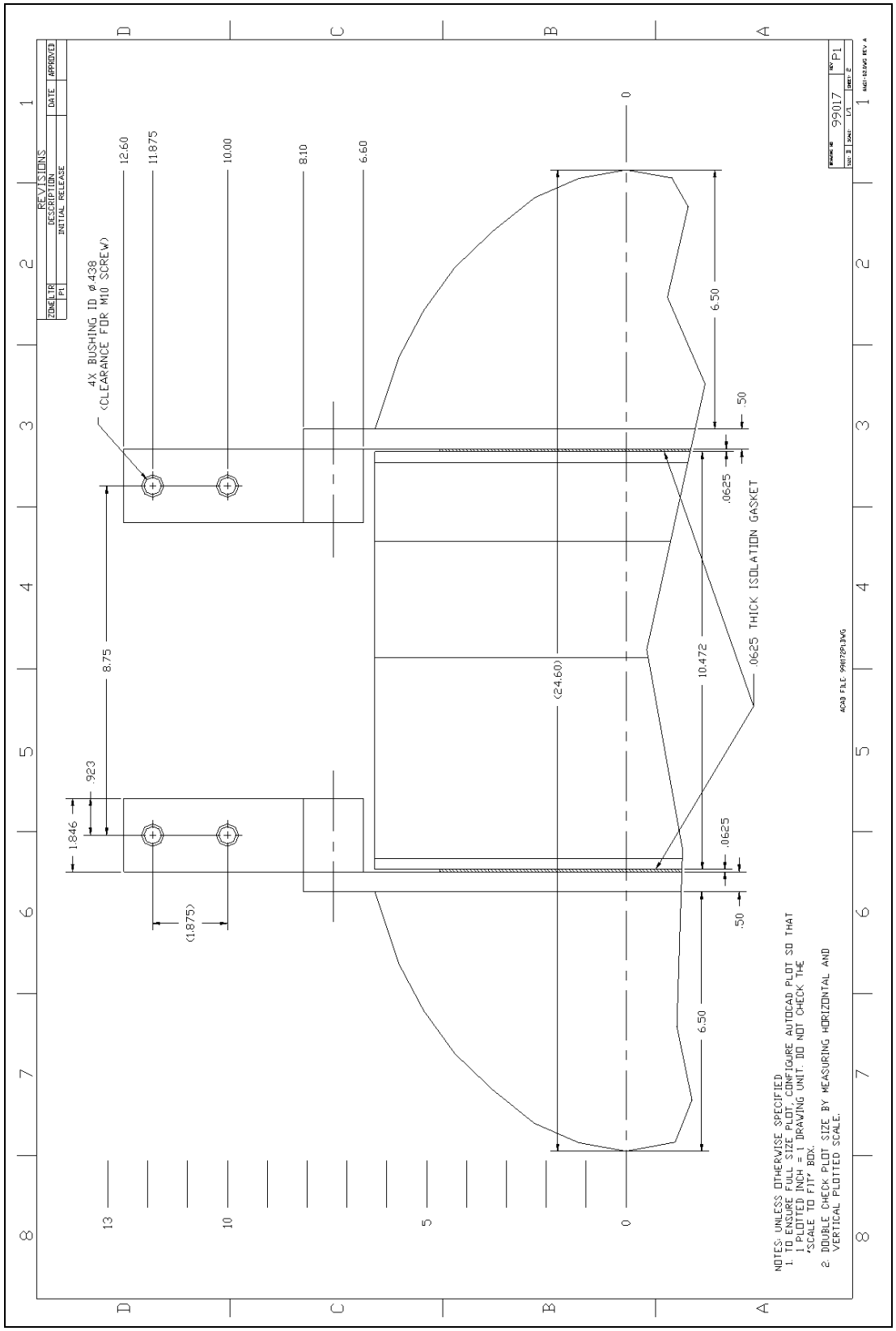

Figure 42, Sonar Head, Scaled Mounting Layout, Sheet 2

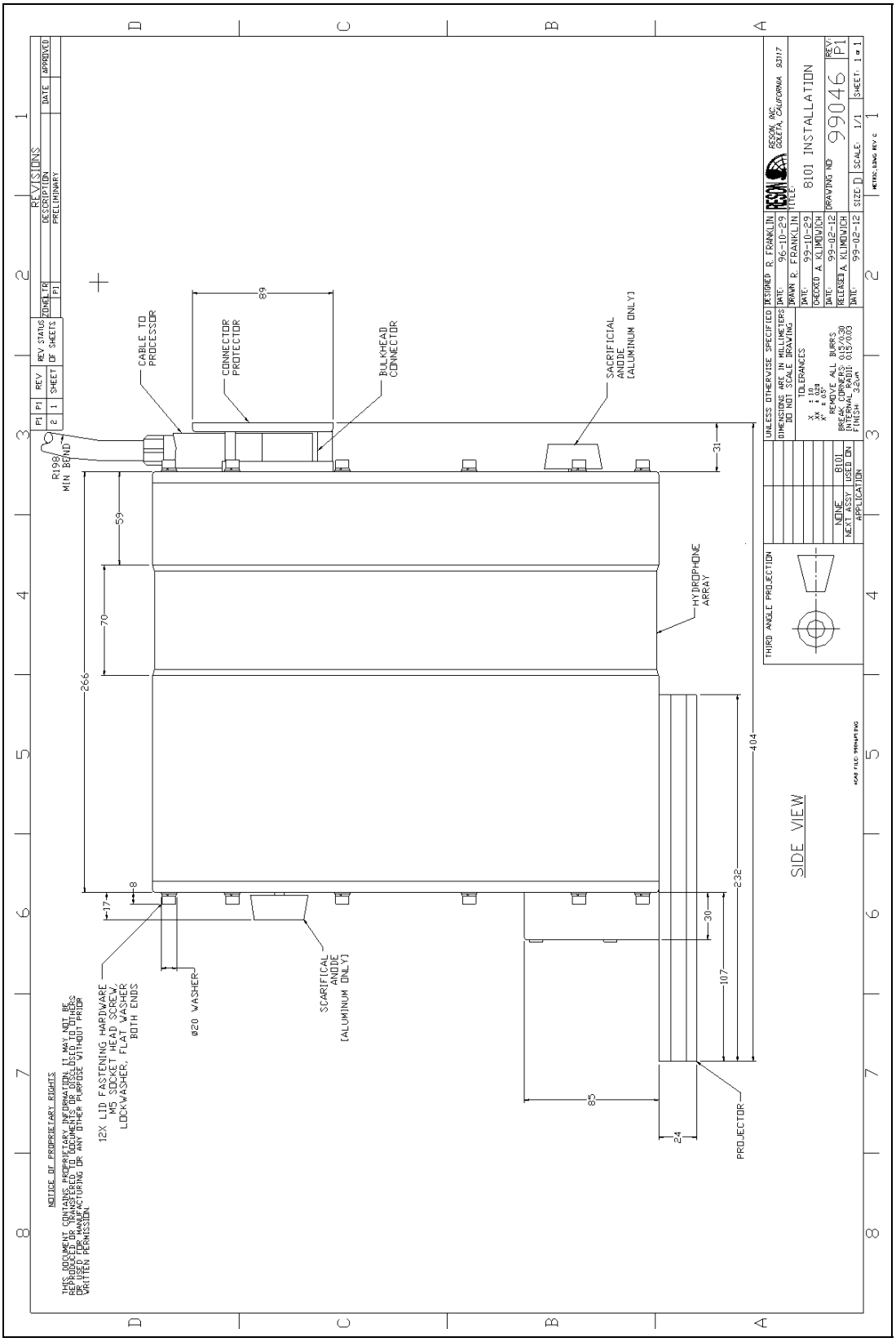

Figure 43, Sonar Head, Installation, Sheet 1

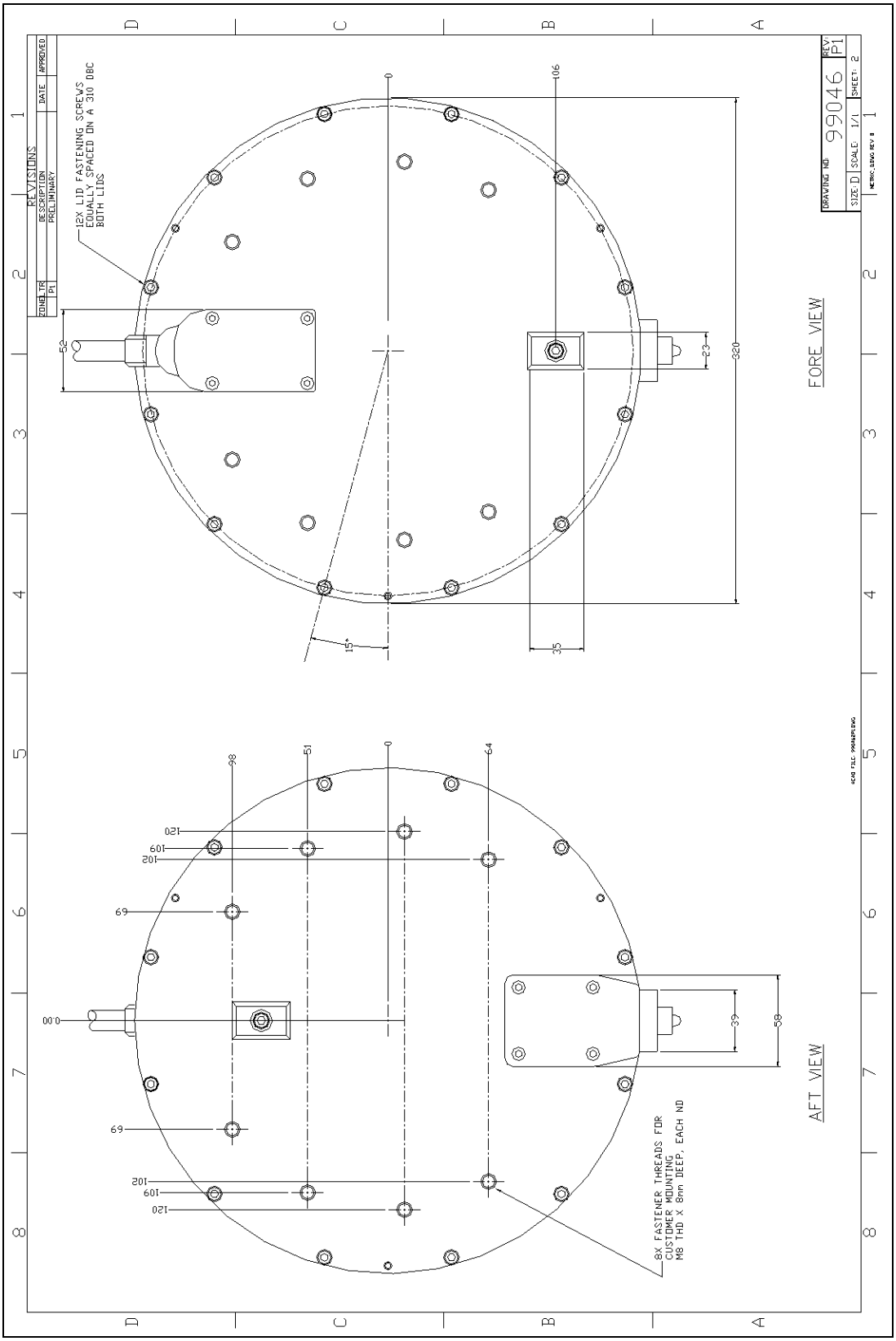

Figure 44, Sonar Head, Installation, Sheet 2

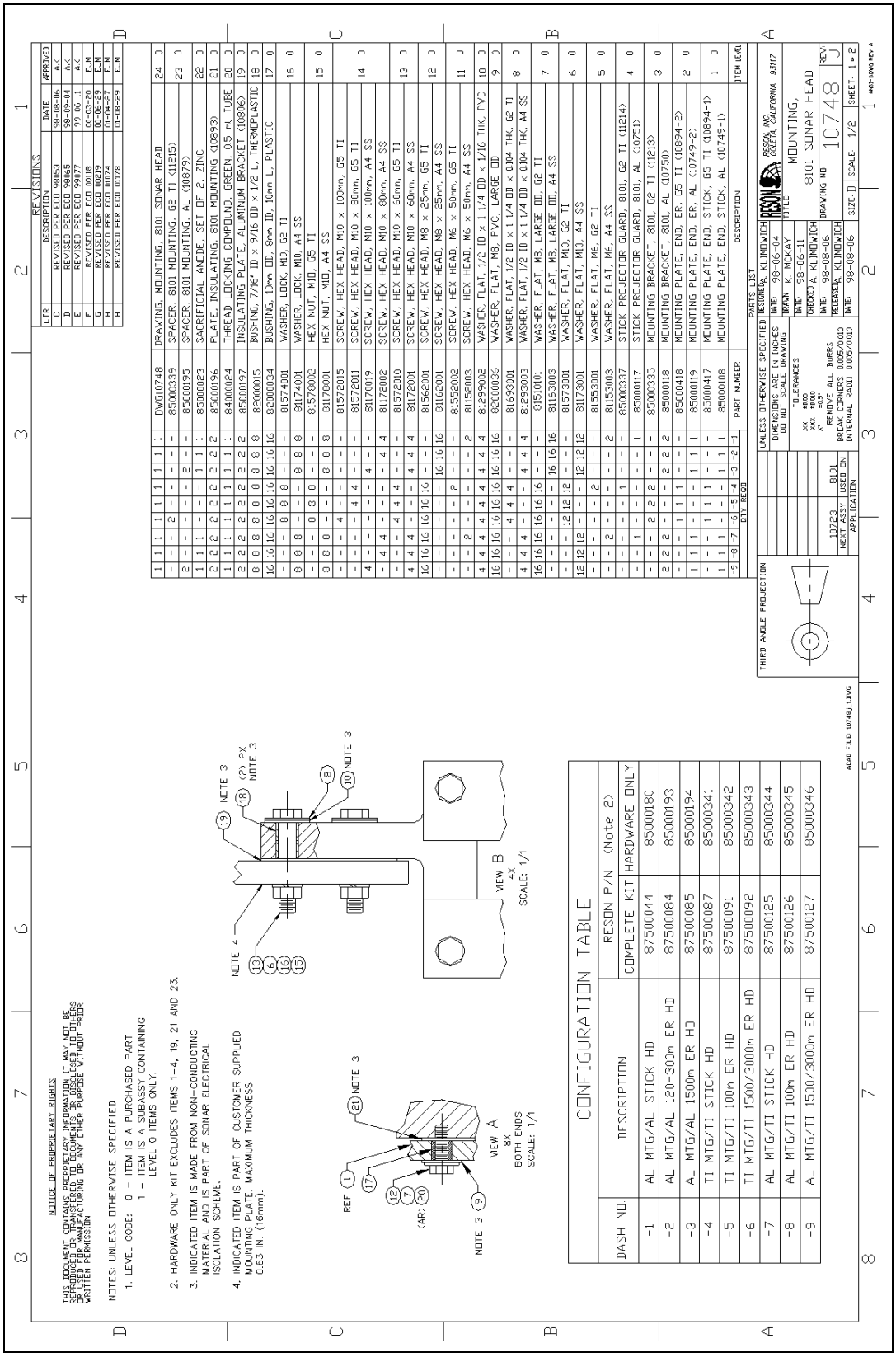

Figure 45, Sonar Head, Mounting Hardware, Sheet 1

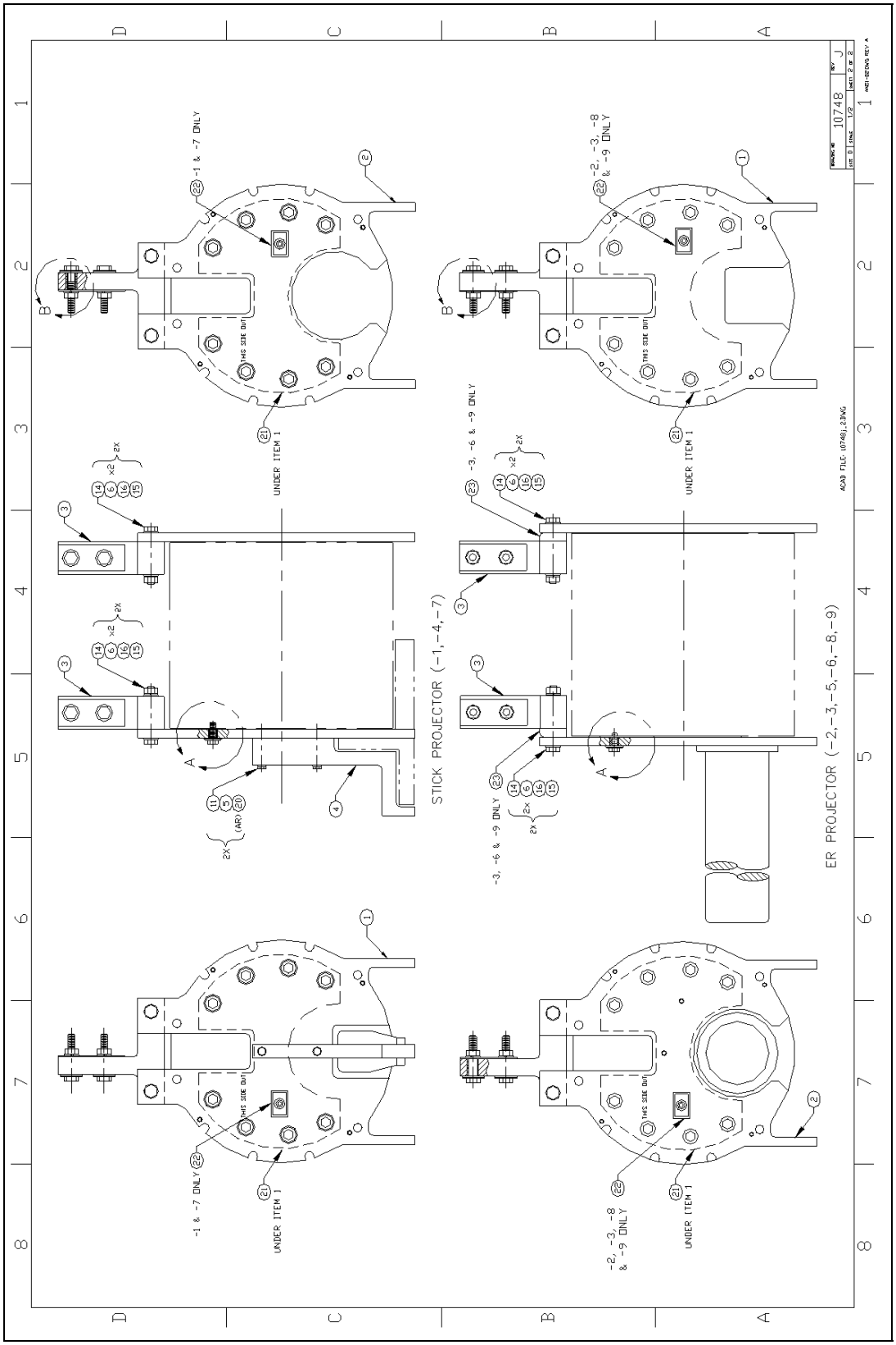

Figure 46, Sonar Head, Mounting Hardware, Sheet 2

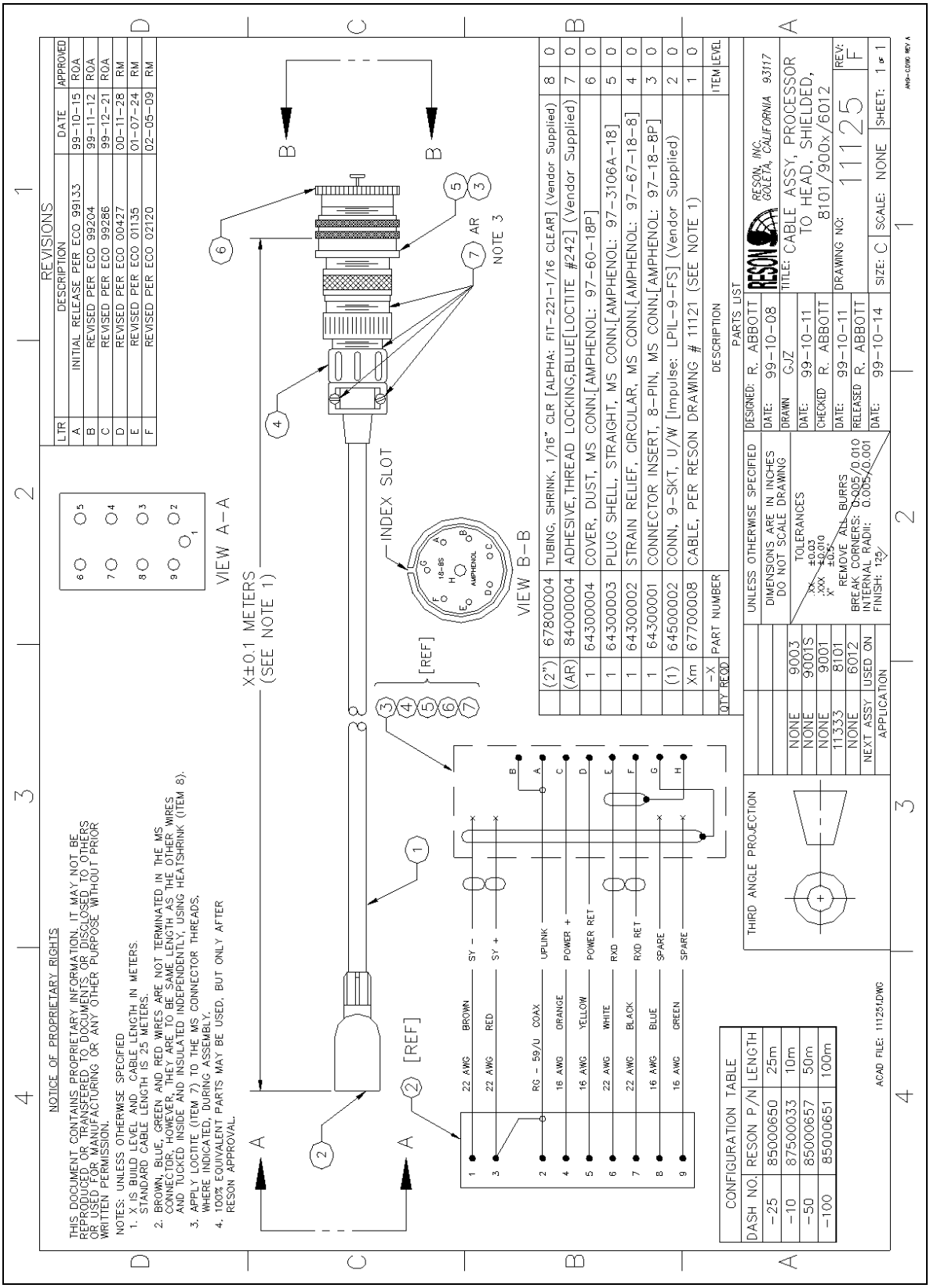

Figure 47, Cable Assembly, Processor to Head, Shielded

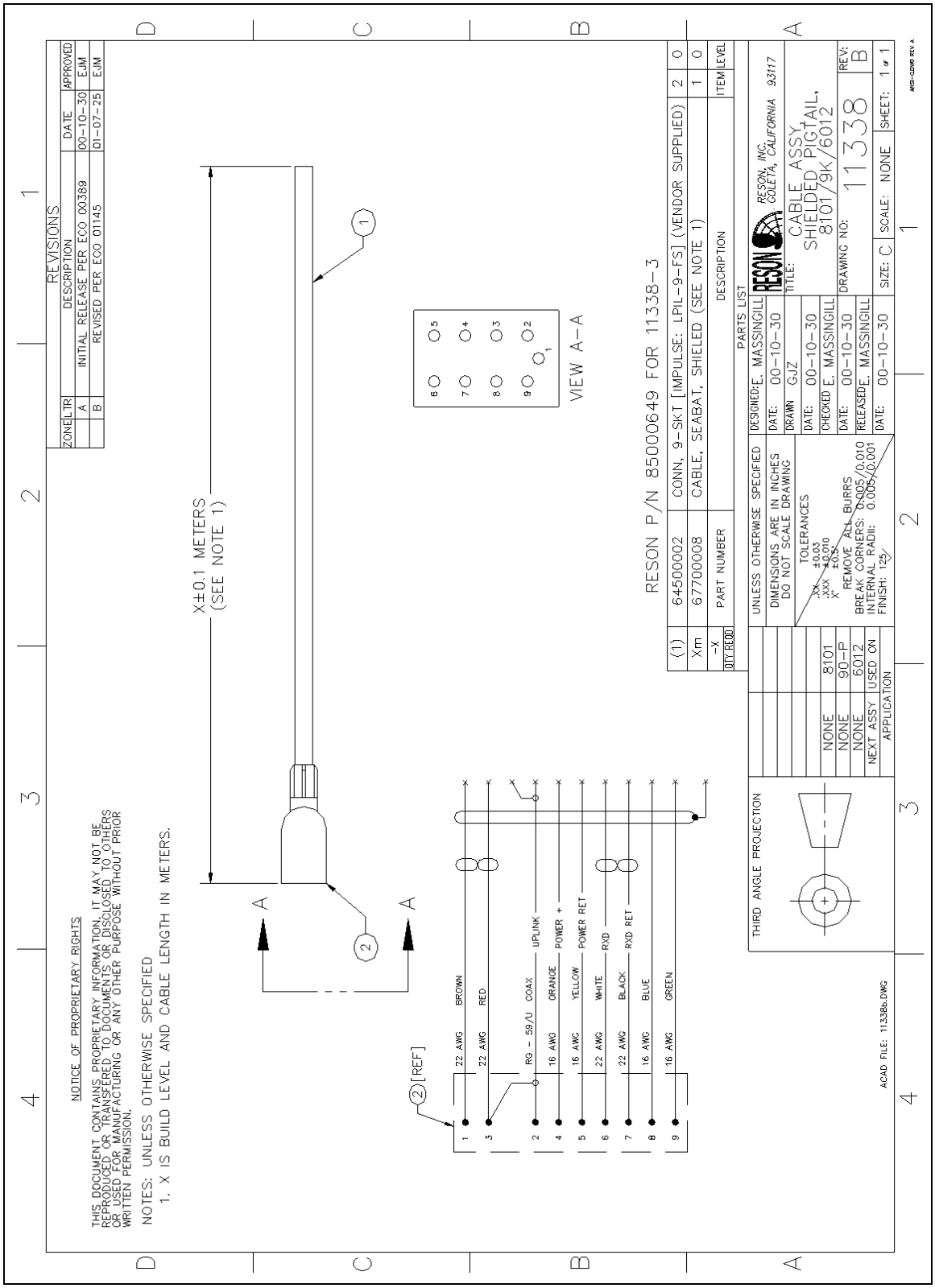

Figure 48, Cable Assembly, Pig Tail, Shielded

NOTE

The following drawings are applicable to systems that are now out of production. The difference is that current systems are shipped with shielded cables.

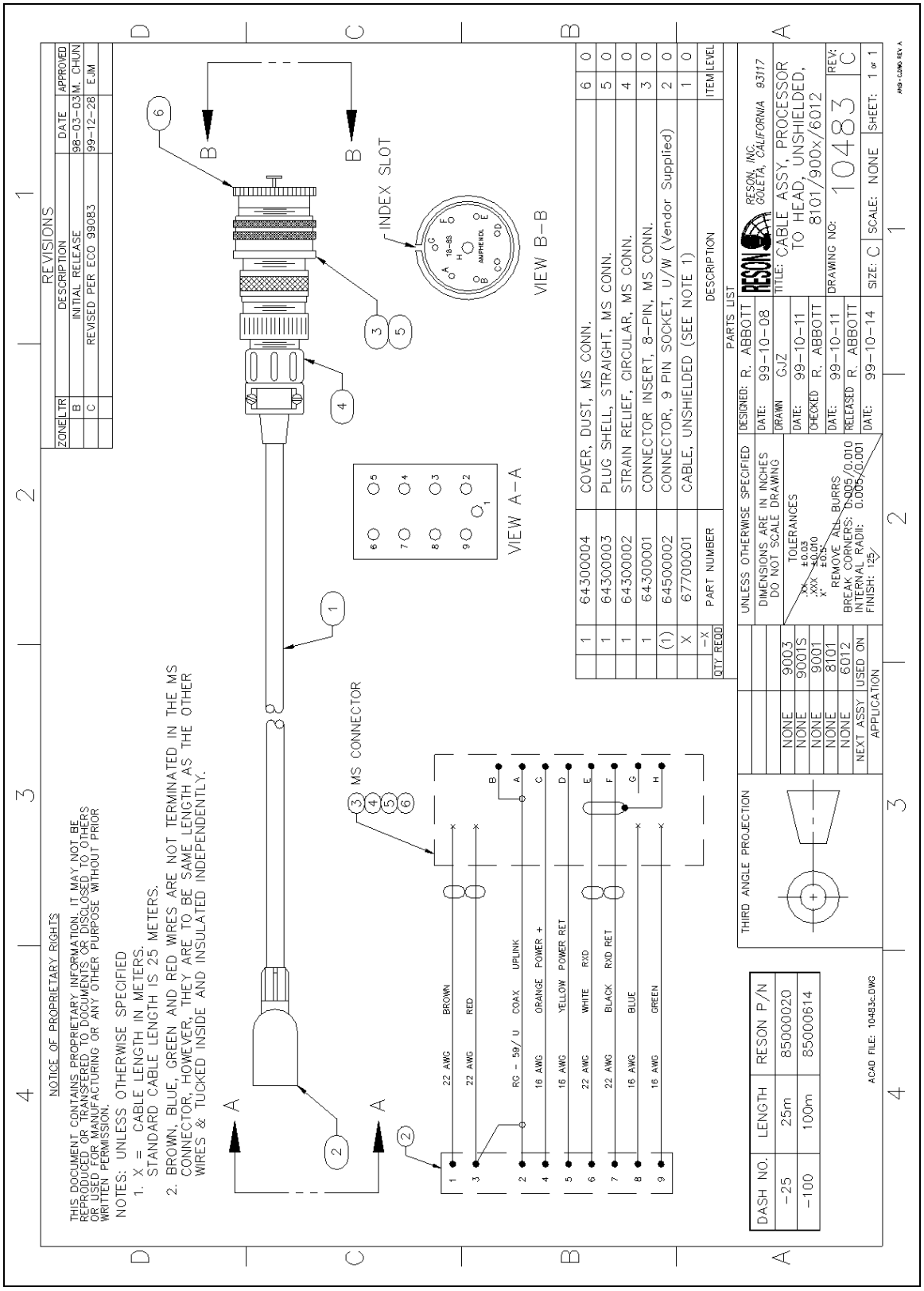

Figure 49, Cable Assembly, Processor to Head, Unshielded

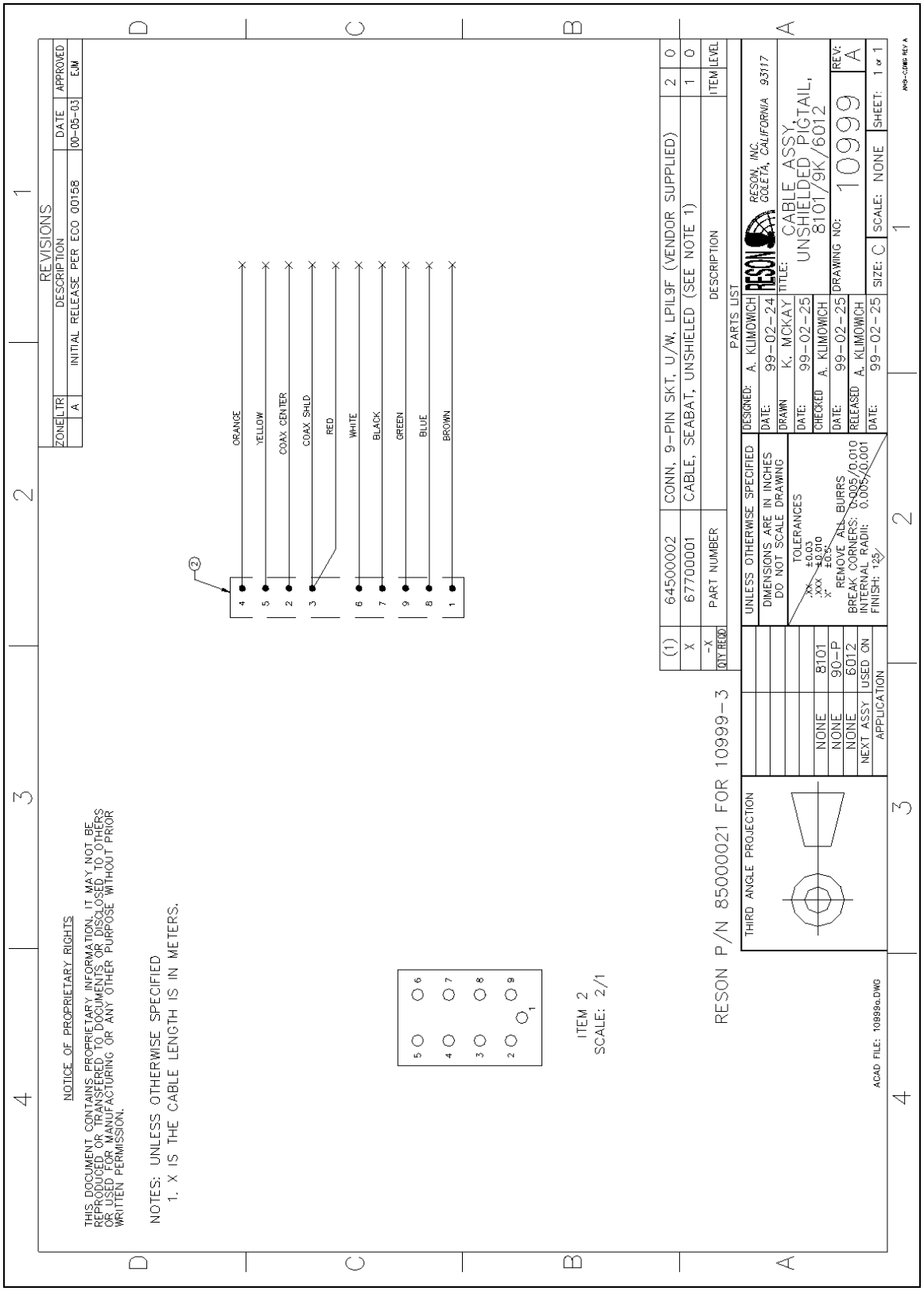

Figure 50, Cable Assembly, Pig Tail, Unshielded