U.S. DEPARTMENT OF COMMERCE
NATIONAL OCEANIC AND ATMOSPHERIC ADMINISTRATION
NATIONAL OCEAN SERVICE

Data Acquisition and Processing Report

Type of Survey Hydrographic

Project No. OPR-N326-RA-02

Time Frame November 2002

LOCALITY

State Washington

General Locality Admiralty Inlet and Port Townsend, Puget Sound

2002

CHIEF OF PARTY
CAPT James C. Gardner, NOAA

LIBRARY and ARCHIVES

DATE _____

Data Acquisition and Processing Report

NOAA Ship RAINIER

OPR-N326-RA-02

Admiralty Inlet and Port Townsend

Hydrographic Letter Instructions dated March 2, 2002

Chief of Party: Captain James Gardner, NOAA

A. EQUIPMENT

This Data Acquisition and Processing Report describes all the RAINIER's survey equipment and the standard methods the equipment is used. Not necessarily all equipment described within was used during data acquisition for this project. Data are acquired by the RAINIER and RAINIER survey launches:

Name	Hull Number
RAINIER	S-221
RA1	1101
RA2	1103
RA4	1016
RA5	1006
RA6	1006
RA7	817

Vessels RA4, RA5, and RA6 are used to acquire shallow-water multibeam (SWMB) data and sound velocity profiles. Vessels RA1, and RA2 are used to collect vertical-beam echosounder (VBES) data, bottom samples, and detached positions. No unusual vessel configurations or problems were encountered on this project. Vessel descriptions and offset measurements are included in Appendix III of this report. In addition a Trimble backpack DGPS system was used for detached positions.

Four different categories of echosounder systems were utilized for project OPR-N326-RA-02. The individual system(s) chosen for use in a given area were decided at the discretion of the Hydrographer using the guidance stated in the Standing Project Instructions, the Hydrographic Letter Instructions, and the Field Procedures Manual, and depended upon the limitations of each system, the bottom topography, the water depth, and the ability of the platform vessel to safely navigate the area. These systems are described in the following section.

Sounding Equipment:

1. Ship Shallow-Water and Intermediate-Depth Multibeam

RAINIER is equipped with a hull-mounted SeaBeam/Elac (Elac) 1050D MKII, which is a dual frequency (180 kHz, 50 kHz), high-resolution multibeam echo sounder system for shallow- and intermediate-water depths. The Elac 1050D MKII transmits utilizing two narrow beamwidth transducer arrays pinging into 14 sectors. The receiving beamformer generates 3 narrow beams for each sector with a beam width of 1.5^{o} and a spacing of 1.25^{o}. Each fan is comprised of three subfans. Hence, there are 14 sectors x 3 beams x 3 subfans resulting in 126 total beams (at an acquisition swath width of 151°). The high-frequency array (180 kHz) was used in depths of approximately 30 to 150 meters, while the low-frequency array (50 kHz) was used in depths of approximately 100 to 300 meters.

2. RESON 8101 Launch Shallow-Water Multibeam (SWMB)

Vessels RA5 is equipped with a hull-mounted Reson SeaBat 8101, with option 033, Angle-Independent Imagery, and option 040, Extended Range Projector. The SeaBat 8101 is a 240 kHz multibeam system that measures relative water depths across a 150° swath, consisting of 101 individual 1.5^o x 1.5^o beams. This system was used to obtain full-bottom coverage in depths generally from 4 meters to 100 meters, with varying range scale values dependent upon the depth of water and across-track slope.

3. RESON 8125 Launch Shallow-Water Multibeam (SWMB)

Vessel RA4 is equipped with a hull-mounted Reson SeaBat 8125, with option 033, Angle-Independent Imagery. The SeaBat 8125 is a 455 kHz multibeam system that uses high frequency focused near-field beam forming to measures relative water depths across a 120° swath, consisting of 240 individual 0.5^o x 1.0^o beams. This system was used to obtain full-bottom coverage in depths generally from 4 meters to 60 meters, with varying range scale values dependent upon the depth of water and across-track slope. Surface sound velocity was measured using an Odom Digibar Pro, model db1200, velocimeter and digitally input into the Seabat 8125 during acquisition.

4. ELAC 1180 Launch Shallow-Water Multibeam (SWMB)

Vessels RA4 and RA6 are equipped with a hull-mounted Elac 1180, which is a single frequency (180 kHz), multibeam echosounder system for shallow- and intermediate-water depths. The transducer assembly consists of two arrays, one starboard and one port, each mounted at a 38° angle from horizontal. The Elac 1180 transmits utilizing both transducer arrays pinging into 14 sectors. The receiving beamformer generates 3 narrow beams within each sector with a beam width of 1.5^o and a spacing of 1.25^o. Three subfans are one total fan. Hence, there are 14 sectors x 3 beams x 3 subfans resulting in 126 total beams, at an acquisition swath width of 151°. The Elac 1180 was generally used in depths of 50 to 100 meters with an acquisition swath width of 131° and to 200 meters with an acquisition swath width of 108°.

Multibeam sounding lines are generally run parallel to the contours and at line spacing three times the water depth.

5. Launch Vertical-Beam Echosounder (VBES)

RAINIER launches RA1 through RA6 are equipped with a Knudsen Engineering Limited 320M, which is a dual frequency (100 kHz, 24 kHz) digital recording vertical-beam echosounder with an analog paper record. The beamwidths for the high and low frequency are 7° and 25° respectively. Soundings were acquired in meters for both frequencies, with high frequency utilized as the primary frequency, although in shallow water frequently the low frequency was not used because it distorted the echosounder trace. Vertical-beam echosounder data were collected in near shore areas to define the four-meter curve and the limit of shallow-water multibeam hydrography, and over offshore reefs and shoals, in depths generally ranging from 4 meters to 20 meters. Sounding lines were run perpendicular to depth contours at a line spacing sufficient to generalize the near shore contours, with splits run at a reduced line spacing to develop shoal areas that were deemed too shallow for the safe or effective use of a vessel equipped with shallow-water multibeam.

6. Side Scan Sonar

All the SWMB used by the RAINIER provide a low-resolution digital SSS record of the multibeam swath. This SSS imagery is primarily used during processing of the multibeam depth data to aid in determining whether anomalous soundings are true features or noise.

7. Diver Least-Depth Gauge

A Diver Least-Depth Gauge (DLDG) is utilized to obtain least depths over selected rocks and features. The DLDG utilized by RAINIER, S/N 68333, was last calibrated on June 28, 2002. A copy of the calibration report is included in Appendix IV. The DLDG measures pressure, and is combined with a CTD profile using VelocWin software to determine depth. These depths were processed in HPS along with the corresponding detached position (DP).

8. Lead Line

Lead lines were used to acquire depths over rocks and other features during shoreline acquisition, for features that were too shallow to acquire soundings using echosounders. RAINIER personnel calibrated lead lines in March 2000 with the exception of lead line RA107, which was calibrated in March 2001; calibration reports are included in Appendix IV of this report.

Positioning Equipment:

Vessels RA1, RA2, RA7, and S-221 are equipped with a Trimble DSM212L to measure and calculate position. The DSM212L is an integrated 12-channel GPS receiver and dual-channel DGPS beacon receiver. The beacon receiver can simultaneously monitor two independent U.S. Coast Guard (USCG) DGPS beacons. There are three modes: Auto-Range, which locks onto the beacon nearest the vessel; Auto-Power, which locks onto the beacon with the greatest signal strength; and Manual, which allows the user to select the desired beacon. Additionally, the DSM212L can accept differential correctors (RTCM messages) from an external source such as a user-established DGPS reference station. The following parameters were monitored in real-time through Trimble's TSIPTalker software to ensure position data quality: number of satellites used in the solution, horizontal dilution of precision (HDOP), latency of correctors, and beacon signal strength. The DSM212L was configured in the manual mode to only use correctors from the Whidbey Island beacon station (302kHz) or Robinson Point (323kHz) and to go off-line if the age of DGPS correctors exceeded 20 seconds, and was also configured to exclude satellites with an altitude below 8 degrees.

Vessels RA4, RA5, and RA6 are equipped with a TSS POS/MV Position and Orientation Sensor to measure and calculate position. The POS/MV is a GPS-aided inertial navigation system, which provides a blended position solution derived from both an Inertial Motion Unit (IMU) and an integrated GPS receiver. The IMU and GPS receiver are complementary sensors, and data from one are used to filter and constrain errors from the other, resulting in higher position accuracy and fewer errors than either system alone. Position accuracy is displayed in real time by the POS/MV software and was monitored to ensure that positioning accuracy requirements as outlined in the NOS Hydrographic Surveys Specifications and Deliverables were not exceeded. In addition, the POS/MV software displays HDOP and number of satellites used in position computation. Data acquisition was generally halted when an HDOP of 2.5 was exceeded or the number of satellites available dropped below four. However, because positional accuracy can be maintained by the POS/MV through short GPS outages with the help of the IMU, data acquisition was not halted during short periods of time when the HDOP and number of satellites used exceeded stated parameters.

Software

Shallow-water multibeam (SWMB) echosounder data, along with position and attitude data from the POS/MV, were acquired using Triton-Elics' ISIS software version 5.94 and logged in the Extended Triton Format (XTF). SWMB data were processed using the CARIS Hydrographic Information Processing System (HIPS) and Hydrographic Data Cleaning System (HDCS) software version 4.3.3, running on a Silicon Graphics Inc. Origin 2100 with the Irix 6.5.2 operating system and CARIS HIPS/SIPS software for NT, version 5.2.

All VBES data were acquired using Coastal Oceanographic's HYPACK MAX version 00.5b, in the "RAW" format. VBES data were processed using CARIS HIPS for Windows NT version 5.2.

Detached positions (DPs) were acquired with HYPACK MAX in the format of target (".tgt") files and processed with "Pydro" version 2.9.3 or later version supplied by the Hydrographic Systems and Technology Program (HSTP) N/CS11.

HYPACK MAX was also used for vessel navigation and line tracking during acquisition of both SWMB and VBES data.

Sound velocity profiles were computed from raw pressure, temperature, and conductivity measurements using VelocWin 7.01 on all boats except RA4 which used VelocWin 8.01 supplied by the NOS Hydrographic Systems and Technology Programs N/CS11 (HSTP).

A complete list of software and versions is included in Appendix I.

B. DATA PROCESSING AND QUALITY CONTROL

Shallow-Water Multibeam Data

Shallow-water multibeam data were monitored in real-time using the 2-D and 3-D data display windows in Isis, the on-screen display for the Reson SeaBat 8101, 8125 sonars, and the Elac HydroStar Online bathymetry data display for the Elac 1180 sonar. Adjustable user parameters common for all sonars used are range scale, power, gain, and pulse width. In addition the swath width and bottom slope type (for the Elac 1050D and 1180) and spreading and absorption values for the Reson 8101 and 8125 sonars. These parameters were adjusted as necessary to ensure the best data quality. Additionally, vessel speed was adjusted as necessary, and in accordance with the NOS Specifications and Deliverables and Draft Standing Project Instructions, to ensure the required along-track coverage for object detection.

Following acquisition, shallow-water multibeam data were converted from XTF to HDCS using the CARIS xtfToHDCS program, and initially reviewed with the HDCS program SwathEdit. All soundings beyond a maximum angle of 60° off-nadir were rejected in accordance with the Draft Standing Project Instructions to reduce the noise and refraction errors possible in these outer beams. Soundings with poor quality flags, 0 for Reson and 3 for Elac system, were also rejected. All soundings were reviewed and obvious depth fliers were identified and manually flagged as "rejected". Vessel positioning and attitude data from each system were similarly displayed and manually cleaned. Fliers or gaps in positioning and attitude data were rejected and interpolated for small periods in time and outright rejected for larger periods in time in which the characteristic of the curve was ambiguous. Additionally, when it was felt that the quality of the data was reduced due to environmental conditions such as sea conditions or extreme variance in sound velocity, data were filtered to a lesser swath width to ensure data quality. Specific data quality factors are discussed in the Descriptive Report for each survey.

After review and cleaning in SwathEdit, depth, position and attitude data were merged, using the HDCS program HDCSLineMerge, with sound velocity, tide, vessel offset, and dynamic draft correctors to compute the corrected depth and position of each sounding. All soundings were then again reviewed, spatially referenced, in HDCS Subset Mode. Data were compared with adjacent lines and crosslines, for systematic errors such as tide or sound velocity errors. Questionable soundings were also compared with adjacent or overlapping data for confirmation or further rejection. Depth fliers and noisy data that were not rejected in SwathEdit were rejected in Subset Mode.

Sun-illuminated Digital Terrain Model images (DTMs) were created to demonstrate coverage and to further check for systematic errors such as tide, sound velocity, or attitude and/or timing errors. DTMs created for quality-assurance purposes were created at two resolutions, depending upon the system used. A 5-meter grid was used for data collected with the Reson Seabat 8101 and Seabat 8125 and a 10-meter grid for data collected with the Elac.

A statistical analysis of all SWMB data is performed using the CARIS Quality Control Report (QCR) function. SWMB crosslines were compared with mainscheme soundings, beam-by-beam, on a system type basis in order to statistically determine the accuracy of each beam. Beams not meeting accuracy requirements as described in the NOS Hydrographic Surveys Specifications and Deliverables were further filtered and rejected. Results from each survey's QCR can be found in the respective Descriptive Report. Crosslines were only run in areas of regular and even bathymetry to utilize the lowest variance in the analysis and to eliminate possible skew of the results due to irregular bathymetry.

Vertical-Beam Echosounder Data

Following acquisition, vertical-beam echosounder data were converted from HYPACK to the CARIS HDCS format using the CARIS HIPS Conversion Wizard for Windows NT. VBES data were processed using CARIS HIPS Single-Beam Editor ("SBEdit"). Obvious fliers were rejected, and analog fathograms of vertical-beam echo soundings were compared graphically with digital data in SBEdit to ensure that peaks of shoals and abrupt changes in slope were properly digitized by the echosounder. After review and cleaning in SBEdit, were merged using the HDCS program HDCSLineMerge, with sound velocity, tide, vessel offset, and dynamic draft correctors to compute the corrected depth and position of each VBES sounding. DTMs of VBES soundings were created using Vertical Mapper to further inspect for fliers and to look for systematic errors such as tide errors.

In addition, VBES data were acquired concurrently with launch multibeam data and were compared to nadir beams of multibeam in real-time during data acquisition to ensure multibeam data quality.

Data Decimation and Field Sheet Production

All VBES and SWMB soundings were combined in the same HDCS project. To produce the final reduced data set represented by the final field sheet, all non-rejected soundings having passed all other quality-assurance checks were imported into a Pydro Preliminary Smooth Sheet (PSS) file using shoal-biased "line-by-line" binning using a cell size of 1.5 millimeters x 1.5 millimeters at survey scale. The resultant thinned data were then excessed in Pydro using a 3-millimeter character size, ensuring that the largest spacing between selected soundings would not exceed 5 millimeters at survey scale. Final selected soundings were exported to MapInfo from Pydro, and plotted in MapInfo at a 2-millimeter character size. Data processing flow diagrams are included in Appendix II of this report.

C. CORRECTIONS TO ECHO SOUNDINGS

Sound Velocity

Sound velocity profiles were acquired with SeaBird Electronics SeaCat SBE19 and SBE 19Plus Conductivity, Temperature, and Depth (CTD) profilers (S/N 219, 281, and 4039). Raw conductivity, temperature, and pressure data were processed using the program VelocWin version 7.01 and VelocWin version 8.01 for the SBE19Plus, which generated sound velocity y profiles for CARIS. Calibration reports and dates of the SeaCat profilers are included in Appendix IV of this report.

The speed of sound through the water was determined by a minimum of one cast every four hours of SWMB acquisition, in accordance with the Standing Project Instructions and the NOS Hydrographic Surveys Specifications and Deliverables Manual. Casts were conducted more frequently when changing survey areas, or when it was felt that conditions, such as a change in weather, tide, or current, would warrant additional sound velocity profiles.

Vessel Offsets and Dynamic Draft Correctors

The following table shows when the vessel offsets and dynamic draft correctors used for this survey were last determined:

Vessel No.	Date of Static Draft and Transducer Offset Measurements	Method of Settlement and Squat Measurement	Date of Settlement and Squat Measurement	Location of Settlement and Squat Measurement
2120	March 1999	OTF*	March 1999	Port Angeles, WA
2121	March 2002	Rod leveling	March 2002	Shilshole Bay, WA
2122	March 2002	Rod leveling	March 2002	Shilshole Bay, WA
2124	March 2002	Rod leveling	March 2002	Shilshole Bay, WA
2125	March 2002	Rod leveling	March 2002	Shilshole Bay, WA
2126	March 2002	Rod leveling	March 2002	Shilshole Bay, WA

*OTF: “On-the-fly” GPS techniques

In March 2002 settlement and squat observations were taken on the RAINIER using a fixed-point method. Although less accurate it showed the values collected in March of 1999 using OTF techniques are still valid and the 1999 values have continued to be used. Although Sensor offset and dynamic draft values were applied to Detached Positions in HPS and to VBES and SWMB data in CARIS during post-processing. These values are stored in CARIS Vessel Configuration Files (VCFs). Vessel offset diagrams and dynamic draft tables are included in Appendix III of this report. The VCFs themselves are submitted with the digital HDCS data.

Heave, Pitch, Roll and Heading, Including Biases and Navigation Timing Errors

SWMB launches (Vessels RA4, RA5, and RA6) utilized a TSS POS/MV Model 320 Position and Orientation System – Marine Vessel (POS/MV), which provides accurate navigation and attitude data to correct for the effects of heave, pitch, roll and heading. The POS generates attitude data in three axes (roll, pitch and heading) to an accuracy of 0.05^{o} or better. Heave measurements supplied by the POS/MV maintain an accuracy of 5% of the measured vertical displacement for movements that have a period of up to 20 seconds. The POS/MV delivers heading measurements by two distinct methods. First, the Dynamic Heading Alignment determines the vessels heading by using the data supplied by the Internal Measurement Unit (IMU) and GPS receivers to achieve heading that is, at best, accurate to within 0.25^{o}. This method suffers from drift but is relatively unaffected by noise. Second, the GPS Azimuth Measurement System (GAMS) determines the geographic vector between two GPS antennas fixed to the vessel by comparing the

phase of satellite signals they receive. The error from this method is largely due to noise, but exhibits no drift. The POS/MV uses the advantages of each method to compensate for the disadvantages of the other to arrive at an optimal accuracy of 0.05^{o}. The POS/MV also has both digital and analog output, the latter being used by vessels RA4 and RA6's Elac 1180 to correct for the effects of roll in real time and to steer the beams of the multibeam sensor.

Heave, roll, pitch, and navigation latency biases were determined during Patch Tests conducted off Shilshole Bay, WA on March 2002 for vessels RA4, RA5, and RA6. The IMU on RA4 was changed out and a new Patch Test was conducted in Resurrection Bay, AK in August 2002.

SWMB vessel offsets, dynamic draft correctors, and system bias values are contained in CARIS Vessel Configuration Files (VCFs) and were created using the program "VCFEDIT" in CARIS. These offsets and biases are applied to the sounding data during processing in CARIS. The VCFs and Patch Test data are included with the digital HDCS data.

Water Level Correctors

Soundings for surveys H11040, H11188, and H11190 were reduced to Mean Lower-Low Water (MLLW) using unverified observed tide data from station Port Townsend, WA (944-4900) obtained from the Center for Operational Oceanographic Products and Services (CO-OPS) web site. These data were used in creating tide tables that were applied to the data in CARIS. Final tide correctors applied to soundings have been fully adjusted for the tidal zoning scheme supplied with the Letter Instructions. Refer to individual Descriptive Reports for further information regarding water level correctors specific to each survey.

D. APPROVAL

As Chief of Party, I have ensured that standard field surveying and processing procedures were used during this project in accordance with the Hydrographic Manual, Fourth Edition; Hydrographic Survey Guidelines; Field Procedures Manual, and the NOS Hydrographic Surveys Specifications and Deliverables Manual, as updated for 2002.

I acknowledge that all of the information contained in this report is complete and accurate to the best of my knowledge.

Approved and Forwarded: James C Gardner 3-5-03

James C. Gardner
Captain, NOAA
Commanding Officer

In addition, the following individual was also responsible for overseeing data acquisition and processing of this project:

Field Operations Officer: Richard A. Fletcher

Richard A. Fletcher
Lieutenant Commander, NOAA

APPENDIX I
Software Versions and Hardware Serial Numbers

Software	Version
Acquisition	
Hypack Max	005b
Survey Data Acquisition Program	14.54
POS/MV Controller v2	3.0
POS/MV Controller v3	1.3
Isis	5.94
Hydrostar (VN 2120, 2124, 2126)	2.9.3
Processing	
HYDROSOFT	
Pydro	2.9.3
HP Tools	10.9.1
KapConv	1.0
Projman	2.0
MapInfo	6.5
Vertical Mapper	3.0
Exceed	7.1
CARIS HIPS (UNIX)	4.3.3
CARIS HIPS (NT)	5.2
Utilities	
Tides and Currents for Windows	2.5b
Horizontal Control	
Starlink Initialization	5.00.3716
TSIP Talker	2.00
DSX/National Geodetic Society DSData Extraction	6.04
GPPS/Geodetic Post Processing Software	5.0.00
Ashtech Mission Planner	3.0
Fillnet	3.1
Vertical Control	
Sound Velocity	
VelocWin	7.01 & 8.01
SBE SeaTerm	1.09
Leveling	
Newiz	1.2
Tides	
LogPlot	1.3
LogStats	1.1
LogPrn Convert	1.6

Equipment

Description	Vessel	Serial Number
Knudsen Engineering Limited 320M Marine Echosounders	Spare	K96388
	RA2	K98579
	RA5	K96387
	RA1	K99323
	RA4	K99322
	RA6	K99324
RESON 8101 SONAR Processor	RA5	17005
RESON 8125 Sonar Processor	RA4	29979
Seabeam/Elac 1180	RA6	76
	RA4	77
	RAINIER	62
Trimble DSM212L	RA0	0220157923
	RA1	0020159717
	RA2	0020159719
	Spare	0220157914
TSS Position & Orientation System POS/MV	RA5	021
TSS Position & Orientation System POS/MV V3	RA6	569
	RA4	295
TSS IMU	RA4	131
	RA5	203
	RA6	028
DMS-O5	RAINIER	002062

APPENDIX II

Data Processing Flow Diagrams

Hydro acquisition to HDCS

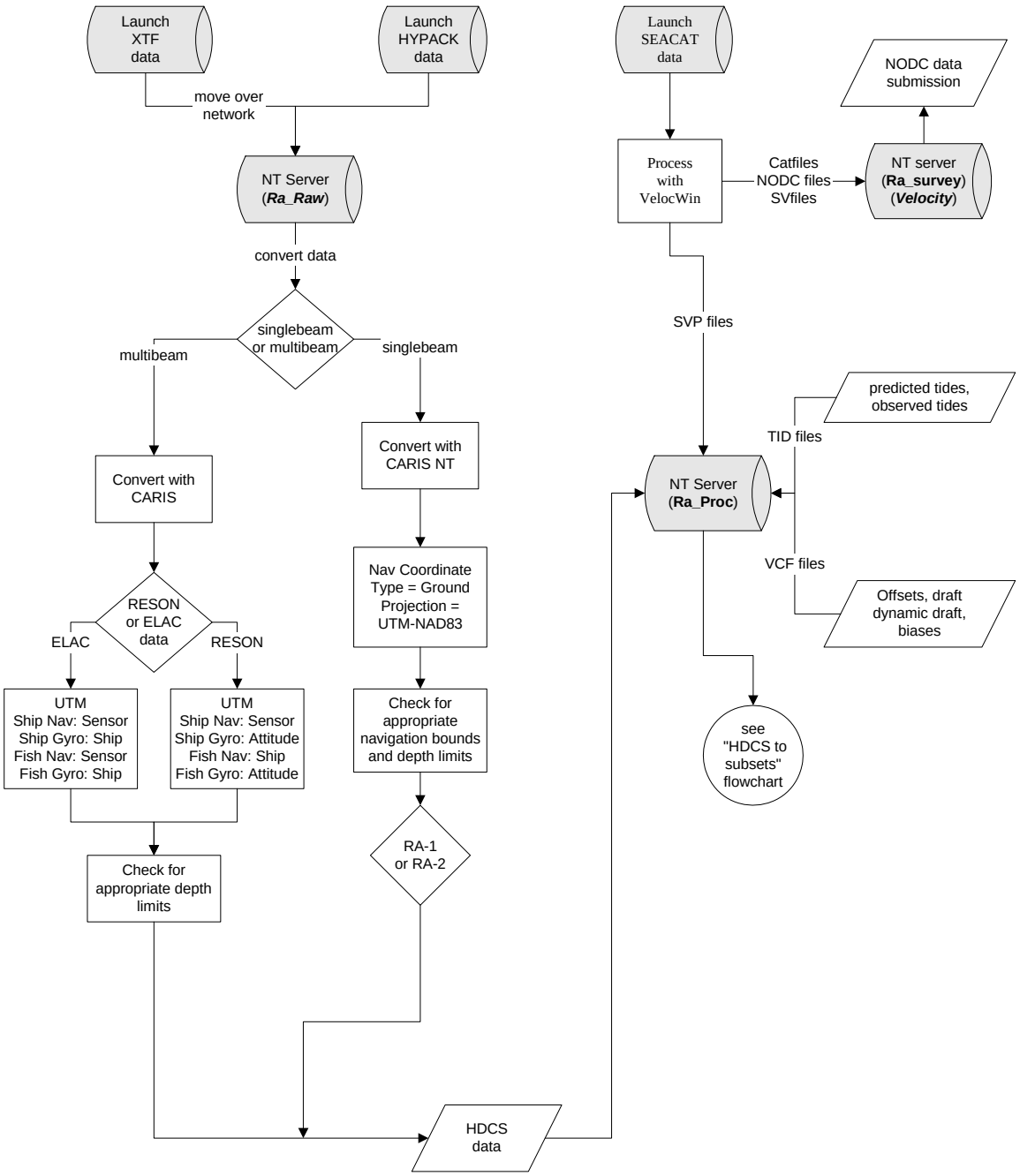

HDCS to subsets

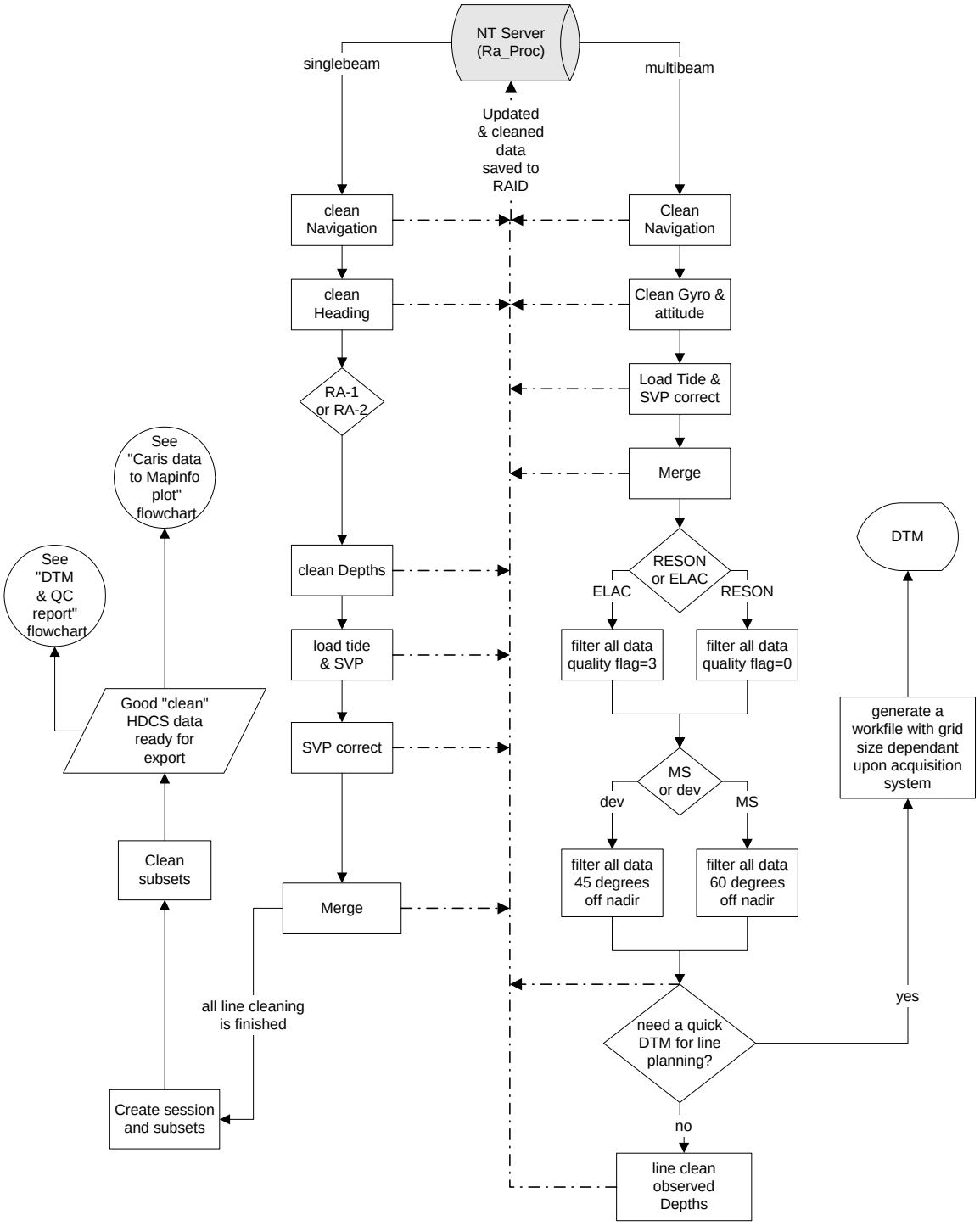

DTM and QC report creation

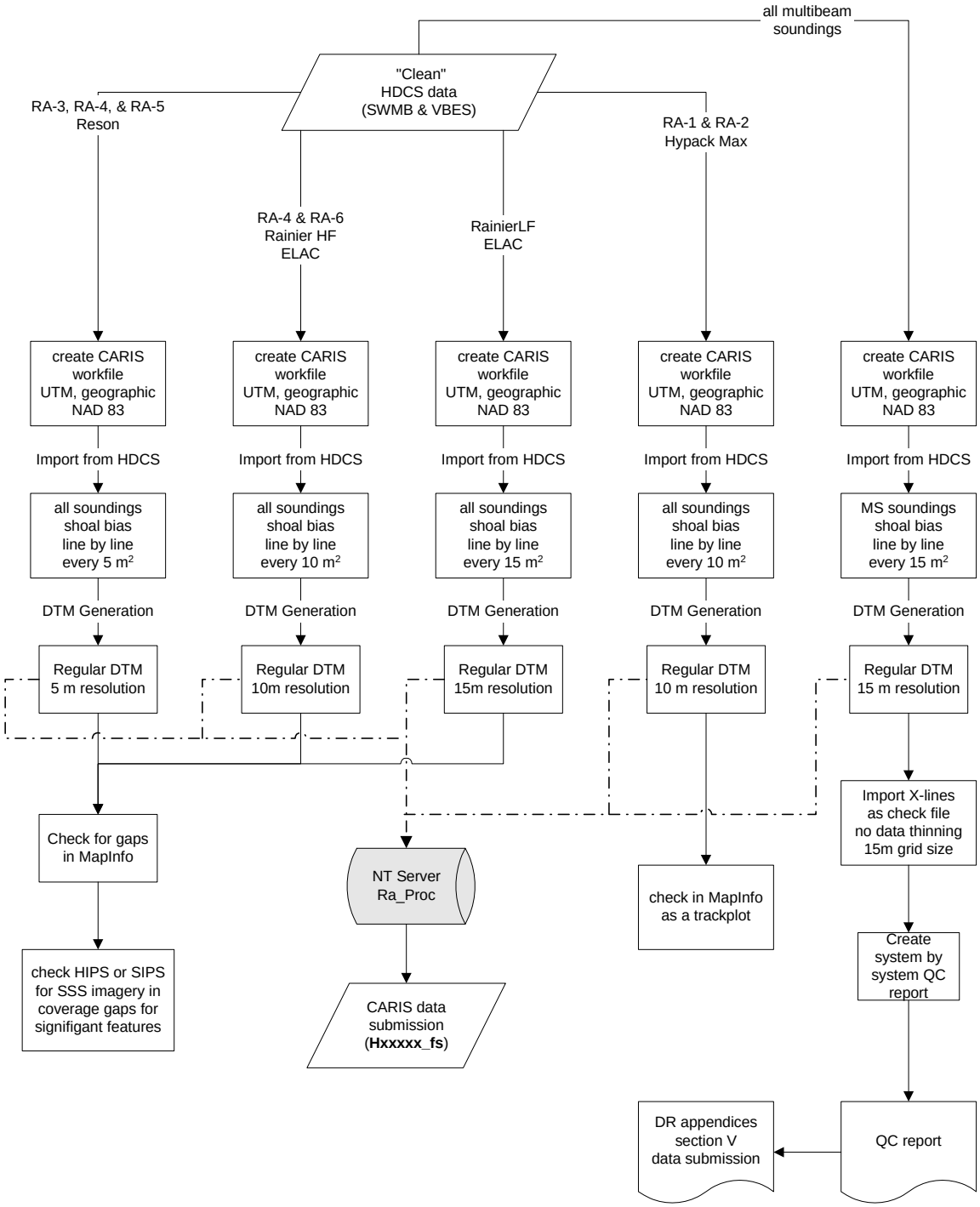

Detached Position processing

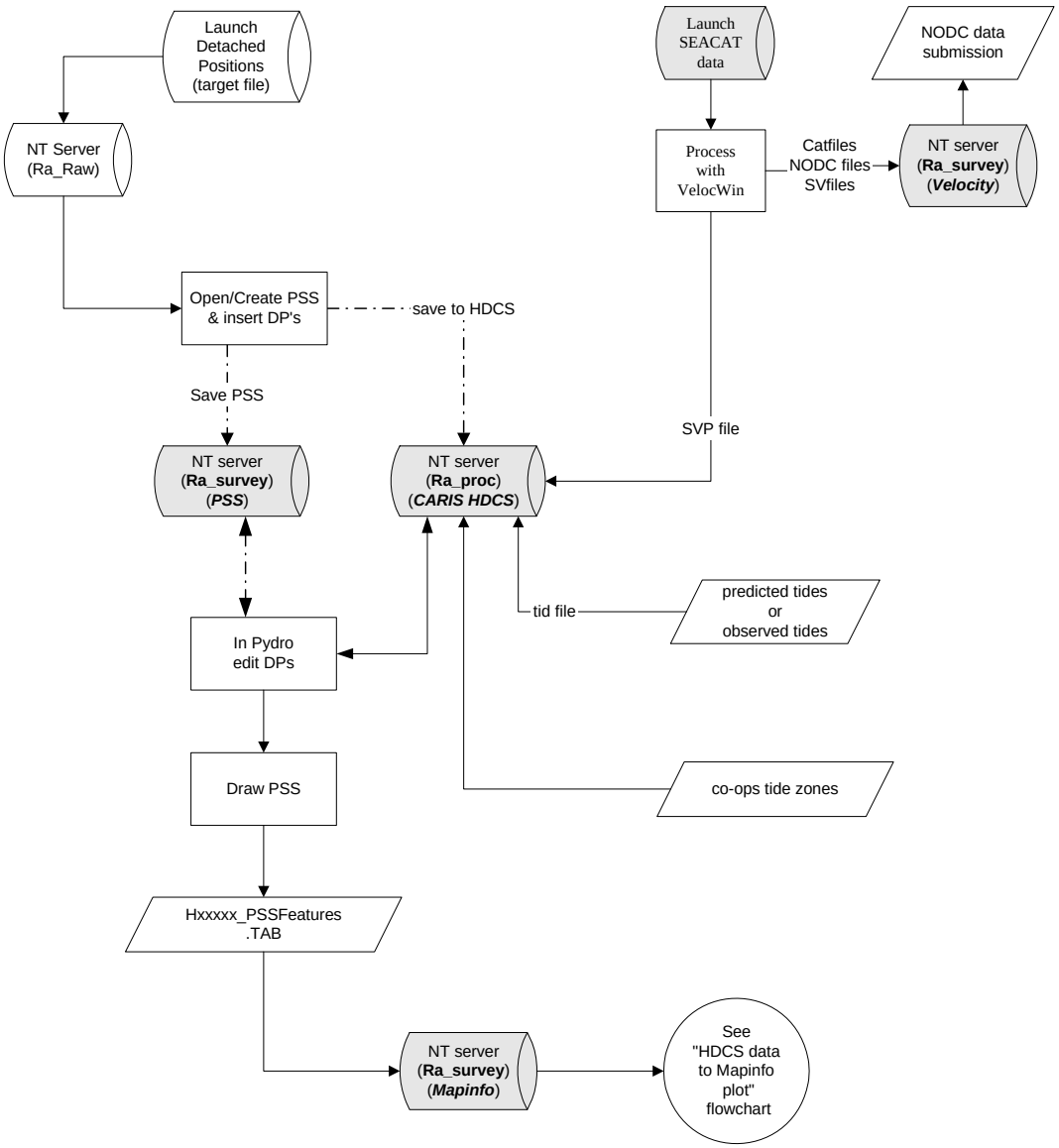

HDCS data to MapInfo plot

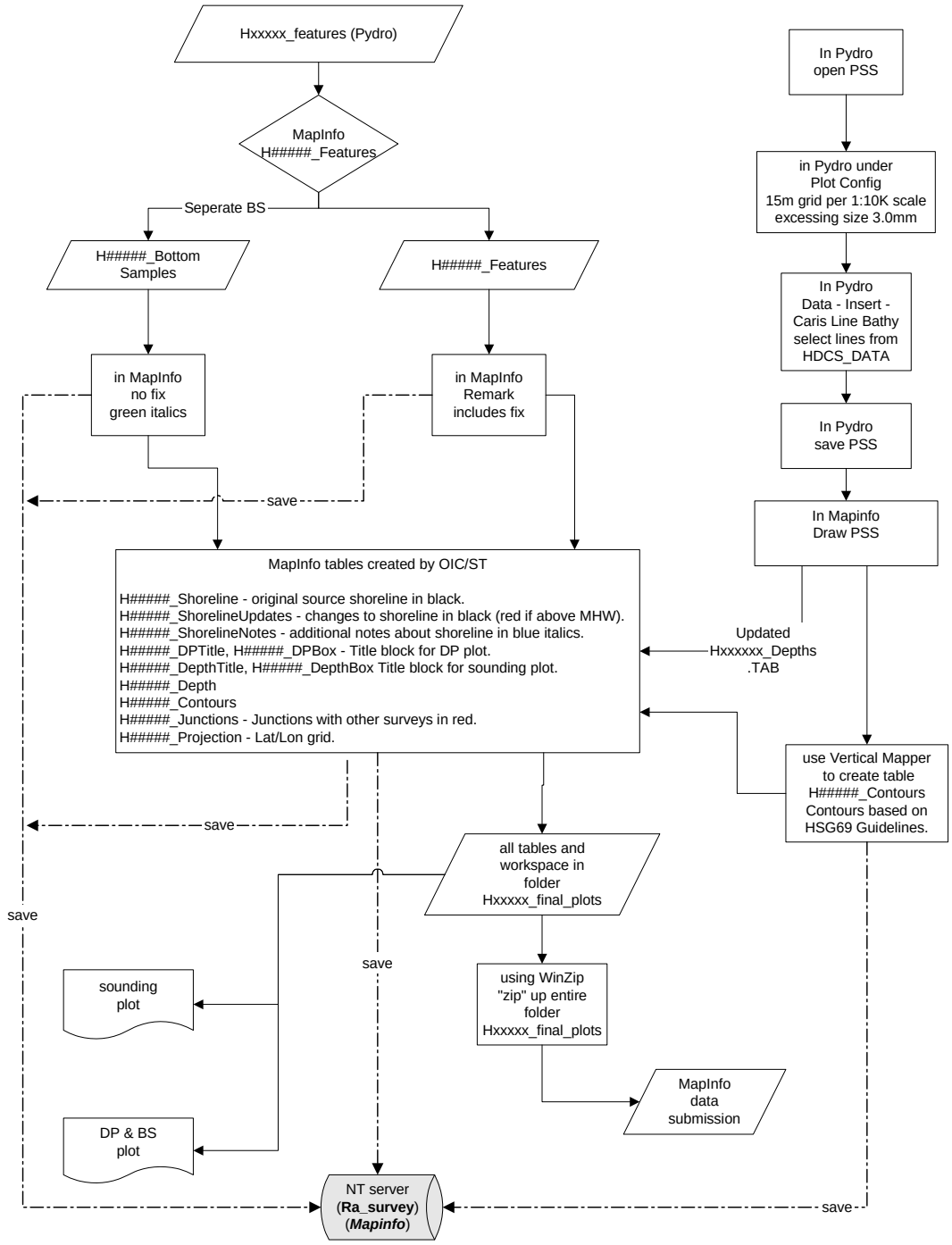

APPENDIX III

Vessel Offset Diagrams

CARIS Offset Sign Conventions

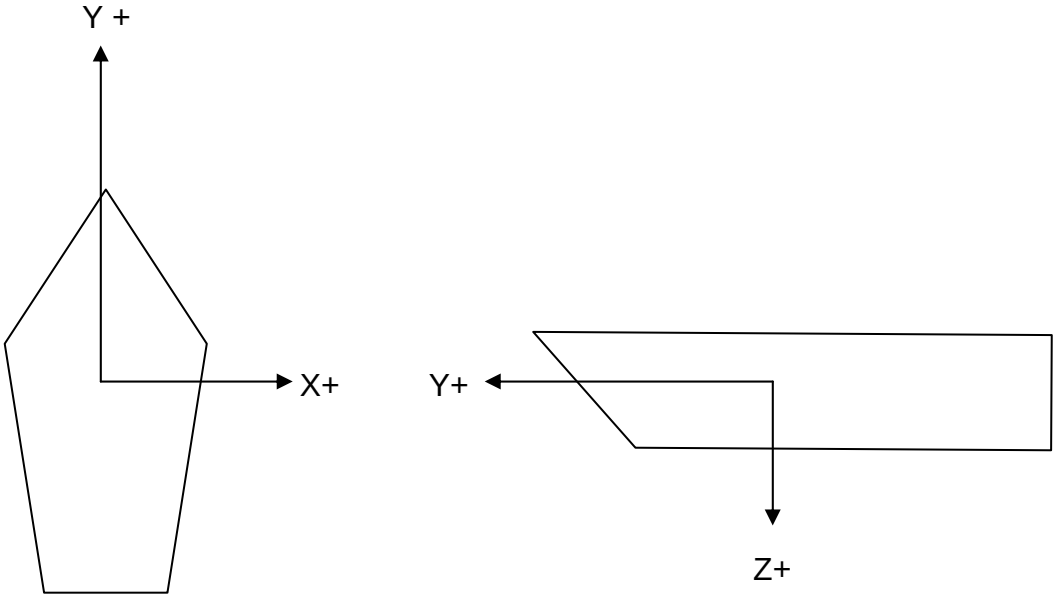

RA-1 (hull 1101) Vessel Offset Measurements

Description: Aluminum Jensen survey launch, jet drive
LOA: 29 feet
Weight: 14,000 lbs

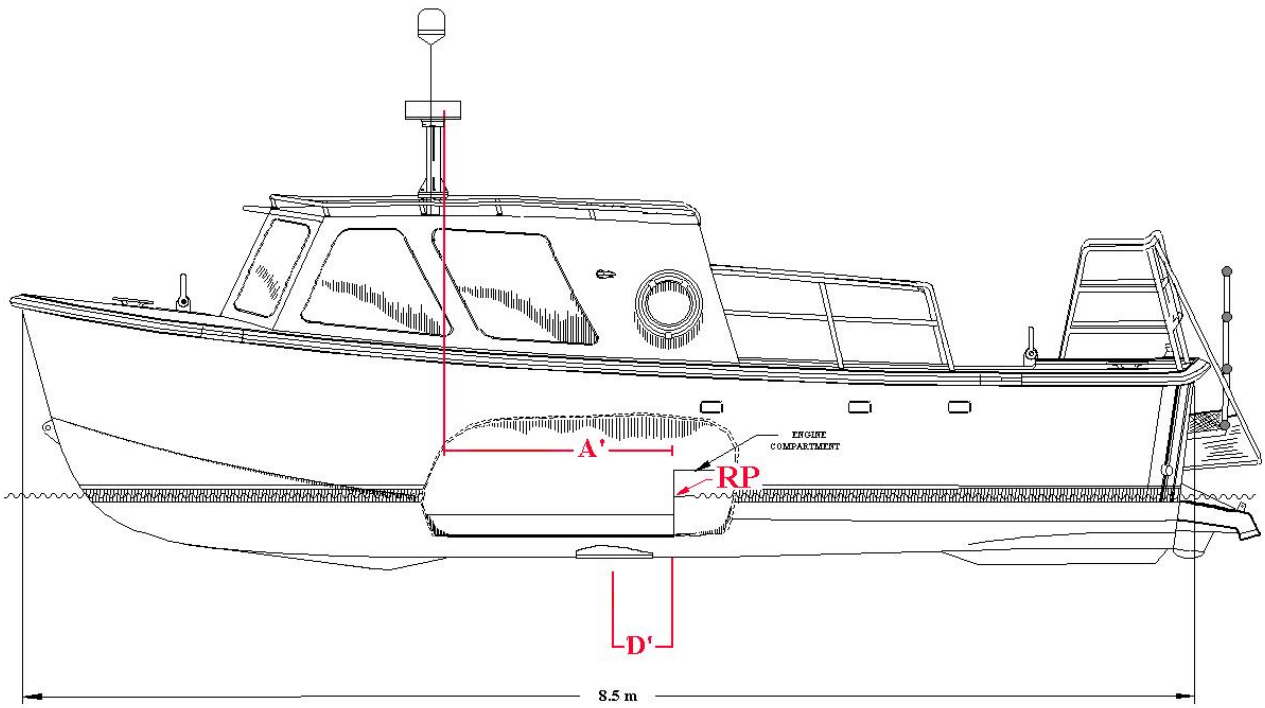

* Assume RP at waterline & centerline of engine bulkhead

		cm.	date measured
RP to GPS	A'	180	3/21/01
RP to VBES transducer	D'	45.5	3/21/01

Dynamic Draft

Speed	0.0	4.0	5.3	6.3	6.7	7.8	8.6	9.0	10.0	10.8
Draft	0.00	0.00	0.02	0.03	0.06	0.07	0.07	0.6	0.02	-0.02

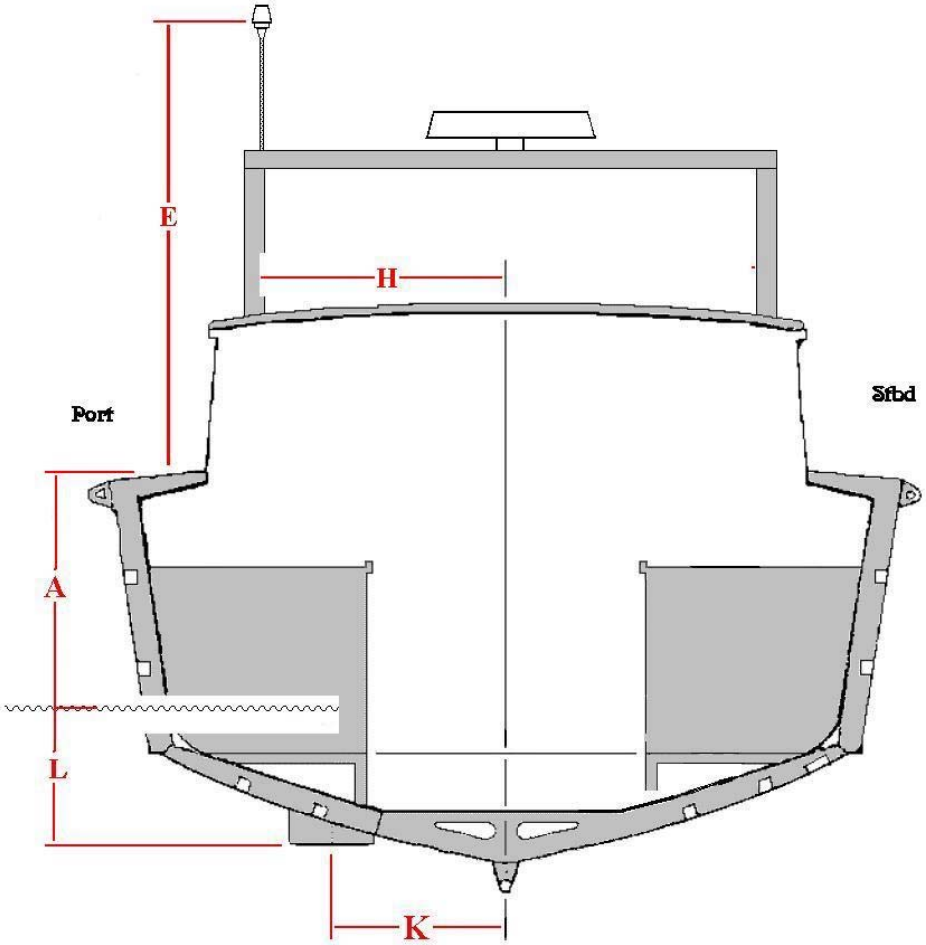

		cm.	date measured
Waterline to deck	A	101	3/21/01
Deck to bottom of GPS	E	254	3/21/01
Centerline to GPS	H	81	3/21/01
Centerline to VBES transducer	K	26	3/21/01
Waterline to VBES transducer	L	43	3/21/01

X	RP to VBES transducer (equals K)	-0.26
	RP to GPS (equals H)	-0.81
Y	RP to VBES transducer (equals D')	0.46
	RP to GPS (equals A')	1.80
Z	RP to VBES transducer (equals L)	0.43
	RP to GPS (equals A + E)	-3.55

RA-2 (hull 1103) Offset Measurements

Description: Muson aluminum work boat
LOA: 28 feet
Weight: 10,600 lbs

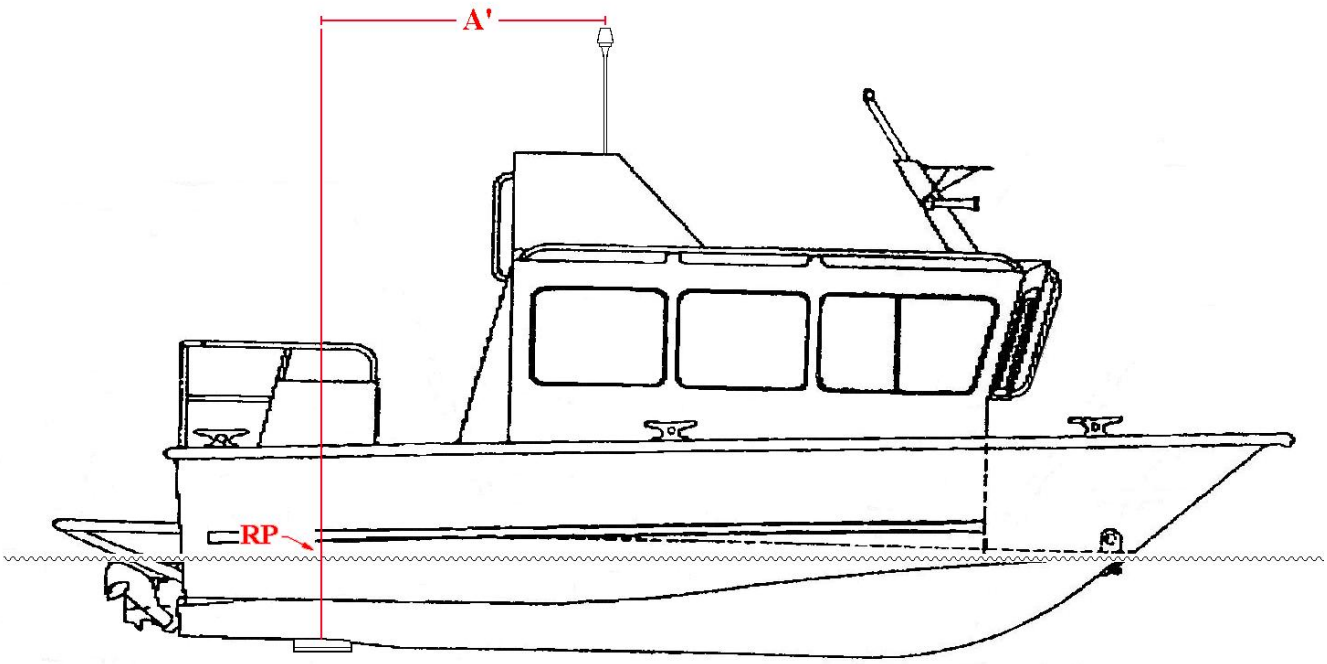

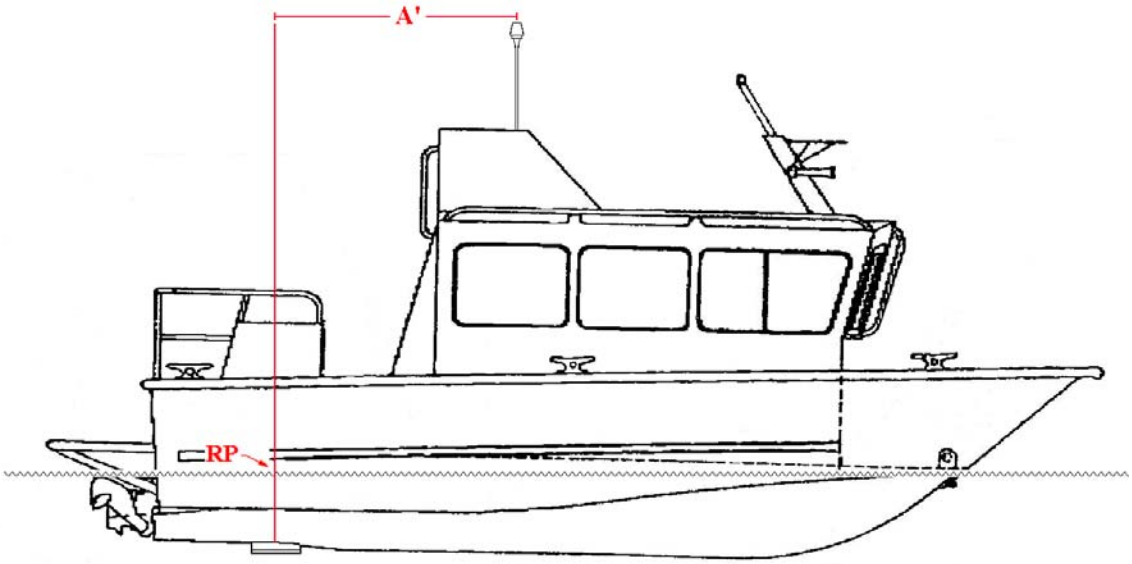

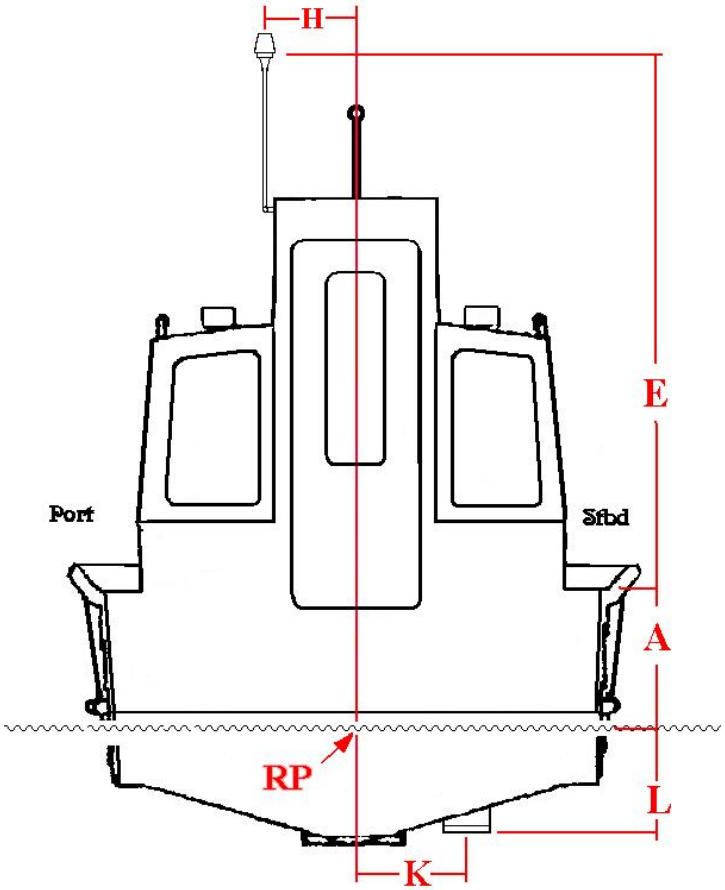

		cm.	date measured
Waterline to deck	A	87.5	Mar-98
Deck to bottom of GPS	E	265.0	May-00
Centerline to GPS	H	49.0	May-00
Centerline to VBES transducer	K	62.0	May-00
Waterline to VBES transducer	L	53.0	Mar-98

X	RP to VBES transducer (equals K)	0.62
	RP to GPS (equals H)	-0.49
Y	RP to VBES transducer (equals D')	0.00
	RP to GPS (equals A')	1.96
Z	RP to VBES transducer (equals L)	0.53
	RP to GPS (equals A + E)	-3.53

RA-4 (hull 1016) Vessel Offset Measurements

Description: Aluminum Jensen survey launch
LOA: 29 feet
Weight: 14,000 lbs

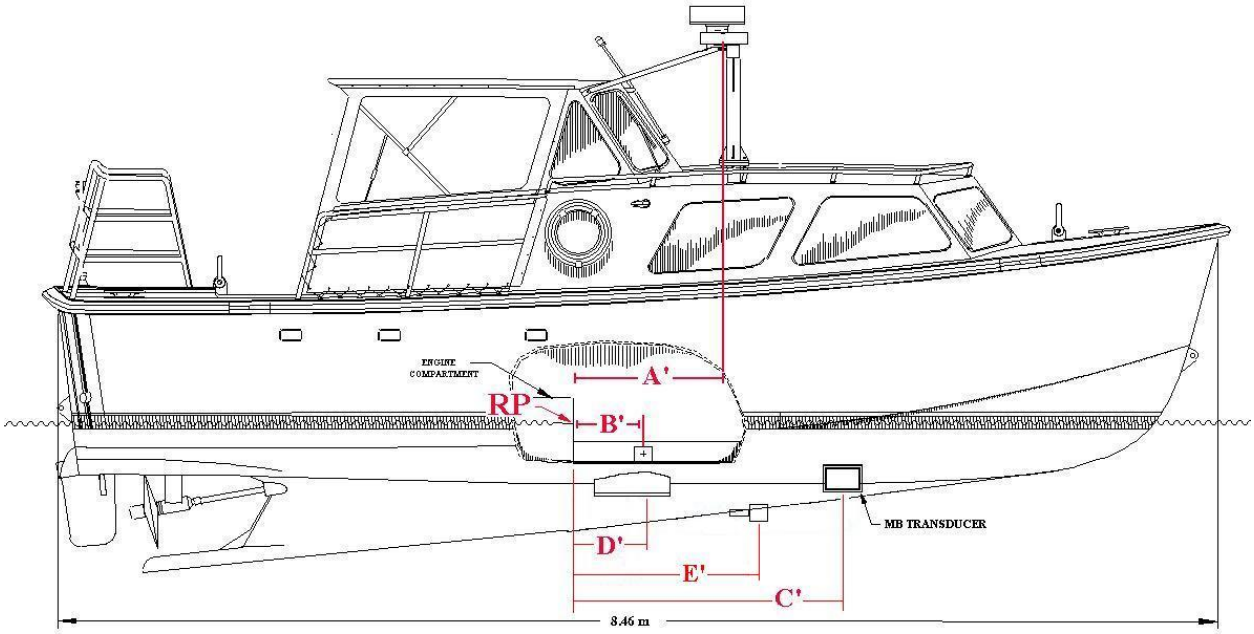

* Assume RP at waterline & centerline of engine bulkhead

		cm.	date measured
RP to GPS	A'	83.0	May-00
RP to MRU	B'	48.0	May-00
RP to Elac ducer	C'	204.0	May-00
RP to VBES ducer	D'	43.4	May-00
RP to Reson ducer	E'	46.5	Mar-02

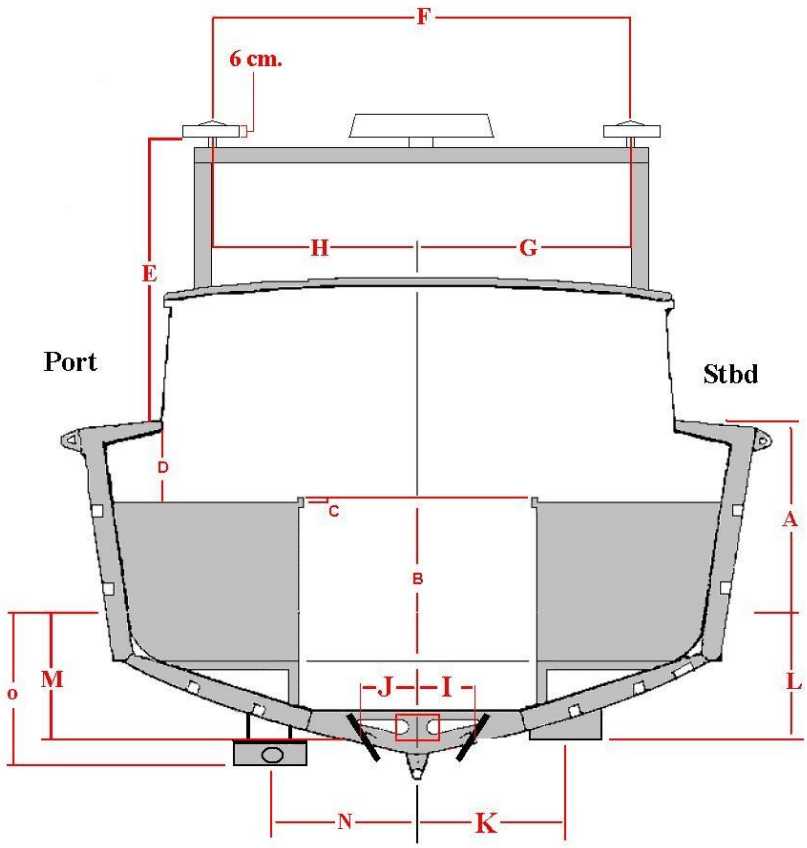

		cm.	date measured
Waterline to deck	A	96.5	May-00
MRU to counter top rail	B	104.9	May-00
Countertop rail	C	0.0	May-00
Countertop to deck	D	21.8	May-00
Deck to bottom of GPS	E	170.9	May-00
GPS to GPS	F	174.5	May-00
Centerline to Stbd GPS	G	87.5	May-00
Centerline to Port GPS	H	87.0	May-00
Centerline to Stbd SWMB ducer	I	33.3	May-00
Centerline to Port SWMB ducer	J	33.4	May-00
Centerline to VBES transducer	K	34.9	May-00
Waterline to VBES transducer	L	61.0	Mar-98
Waterline to Elac transducer	M	57.0	May-00
Centerline to Reson transducer	N	-38.0	Mar-02
Waterline to Reson transducer	O	80.5	Mar-02

CARIS Vessel Configuration File Parameters: RA-4

Vessel Configuration RA –4 SeaBeam/Elac 1180 - Two Transducers (63 Beams Each)

	Time Error	Delta X	Delta Y	Delta Z	Roll	Pitch	Azimuth	Draft
Port Transducer	0.00	-0.34	2.04	0.57	0.80	-2.40	-1.60	0.00
Stbd. Transducer	0.00	0.34	2.04	0.57	-1.20	-4.70	-0.50	0.00

	Time Error	Delta X	Delta Y	Delta Z	Error
Navigation	-1.63	0.00	0.48	0.30	
Gyro	0.00	0.00	0.48	0.30	0.00
Heave	0.00	0.00	0.48	0.30	0.10
Pitch	0.00	0.00	0.48	0.30	0.00
Roll	0.00	0.00	0.48	0.30	0.53

Dynamic Draft

Speed	0.0	1.4	3.0	3.5	4.7	5.4	6.7	9.1	10.0	12.0
Draft	0.00	-0.02	-0.01	0.00	0.02	0.03	0.04	0.00	-0.03	-0.13

SVP Entries Port Transducer

	X	Y	Z
Pole Top	-0.33	2.04	0.57
Pole Bottom	-0.33	2.04	0.57
	Pitch	**Roll**	**Azimuth**
Offsets	0.00	38.00	0.00

SVP Entries Stbd. Transducer

	X	Y	Z
Pole Top	0.33	2.04	0.57
Pole Bottom	0.33	2.04	0.57
	Pitch	**Roll**	**Azimuth**
Offsets	0.00	-38.00	0.00

CARIS Vessel Configuration File Parameters: RA-4

Vessel Configuration RA –4 Reson SeaBat 8125 - One Transducer (240 Beams)

	Day #	Time Error	Delta X	Delta Y	Delta Z	Roll	Pitch	Azimuth	Draft
Transducer	001	0.00	-0.38	0.47	0.81	0.20	-0.40	-0.80	0.00

	Time Error	Delta X	Delta Y	Delta Z	Error
Navigation	0.20	0.00	0.48	0.30	
Gyro	0.00	0.00	0.48	0.30	0.00
Heave	0.00	0.00	0.48	0.30	0.00
Pitch	0.00	0.00	0.48	0.30	0.00
Roll	0.00	0.00	0.48	0.30	0.00

Dynamic Draft

Speed	3.0	4.1	5.0	6.2	7.4	8.4	9.2	10.1	10.7	11.3
Draft	0.00	0.02	0.04	0.06	0.07	0.06	0.4	0.01	-0.02	-0.06

SVP Entries

	X	Y	Z
Pole Top	0.00	0.79	0.53
Pole Bottom	0.00	0.79	0.53
	Pitch	**Roll**	**Azimuth**
Offsets	0.00	0.00	0.00

RA-5 (hull 1006) Vessel Offset Measurements

Description: Aluminum Jensen survey launch
LOA: 29 feet
Weight: 14,000 lbs

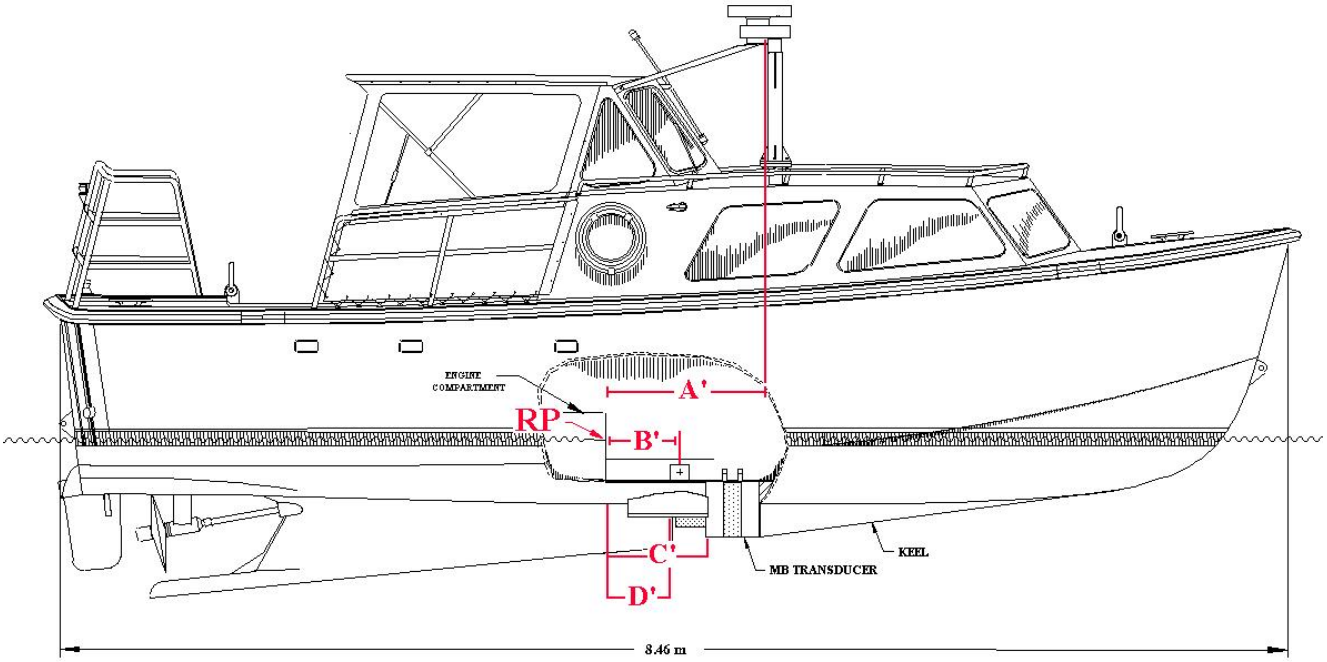

* Assume RP at waterline & centerline of engine bulkhead

		cm.	date measured
RP to GPS	A'	95.6	5/00 & 4/98
RP to MRU	B'	51.9	Mar-99
RP to SWMB ducer	C'	73.3	Mar-99
RP to VBES ducer	D'	40.5	May-00

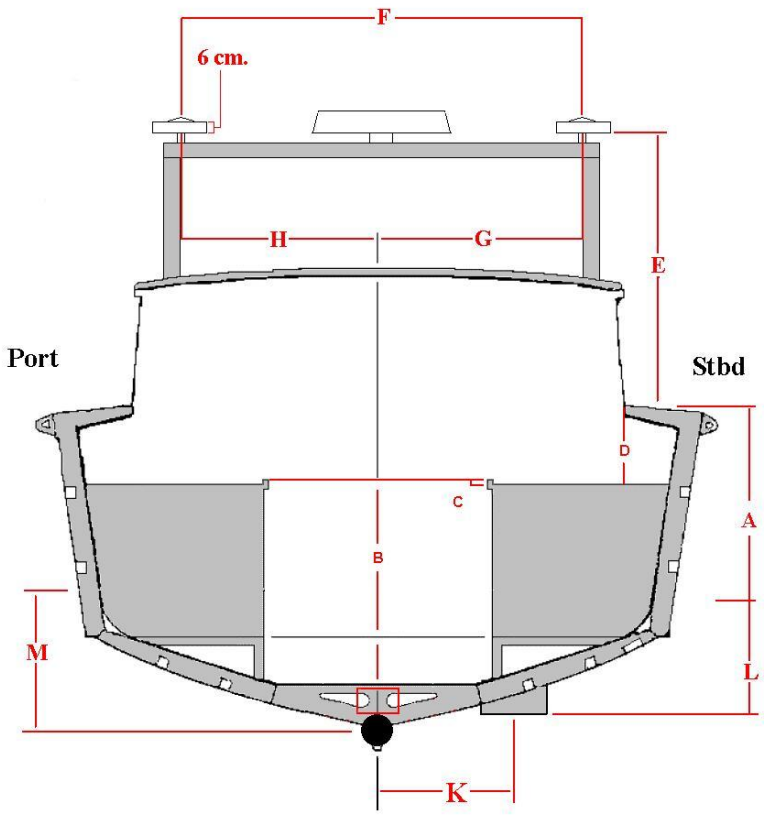

		cm.	date measured
Waterline to deck	A	100.0	Mar-99
MRU to counter top rail	B	105.0	Mar-99
Countertop rail	C	1.8	Mar-99
Countertop to deck	D	14.7	Mar-99
Deck to bottom of GPS	E	176.0	May-00
GPS to GPS	F	181.0	Apr-98
Centerline to Stbd GPS	G	90.0	Apr-98
Centerline to Port GPS	H	91.0	Apr-98
Centerline to VBES transducer	K	49.7	May-00
Waterline to VBES transducer	L	53.0	Apr-98
Waterline to SWMB transducer	M	49.6	Mar-99

CARIS Vessel Configuration File Parameters: RA-5

Vessel Configuration RA –5 Reson SeaBat 8101 - One Transducer (101 Beams)

	Time Error	Delta X	Delta Y	Delta Z	Roll	Pitch	Azimuth	Draft
Transducer	0.00	0.00	0.73	0.50	0.30	0.97	-0.35	0.00

	Time Error	Delta X	Delta Y	Delta Z	Error
Navigation	0.20	0.00	0.52	0.18	
Gyro	0.00	0.00	0.52	0.18	0.00
Heave	0.00	0.00	0.52	0.18	0.00
Pitch	0.00	0.00	0.52	0.18	0.00
Roll	0.00	0.00	0.52	0.18	0.00

Dynamic Draft

Speed	1.0	3.0	4.3	6.0	6.7	8.3	9.9	12.1	14.2	17.3
Draft	0.00	0.01	0.02	0.05	0.06	0.06	0.04	-0.03	-0.09	-0.15

SVP Entries

	X	Y	Z
Pole Top	0.00	0.73	0.50
Pole Bottom	0.00	0.73	0.50

	Pitch	Roll	Azimuth
Offsets	0.00	0.00	0.00

RA-6 (hull 1015) Vessel Offset Measurements

Description: Aluminum Jensen survey launch
LOA: 29 feet
Weight: 14,000 lbs

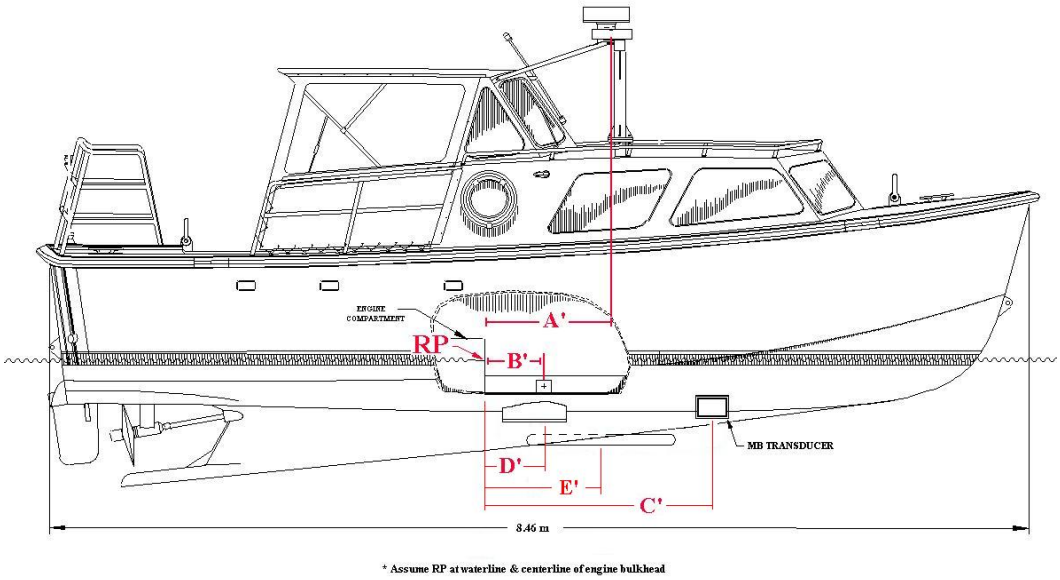

		cm.	date measured
RP to GPS	A'	97.9	May-00
RP to MRU	B'	46.7	May-00
RP to SWMB ducer	C'	203.7	May-00
RP to VBES ducer	D'	43.5	May-00
RP to Klein SSS	E'	46.5	Mar-02

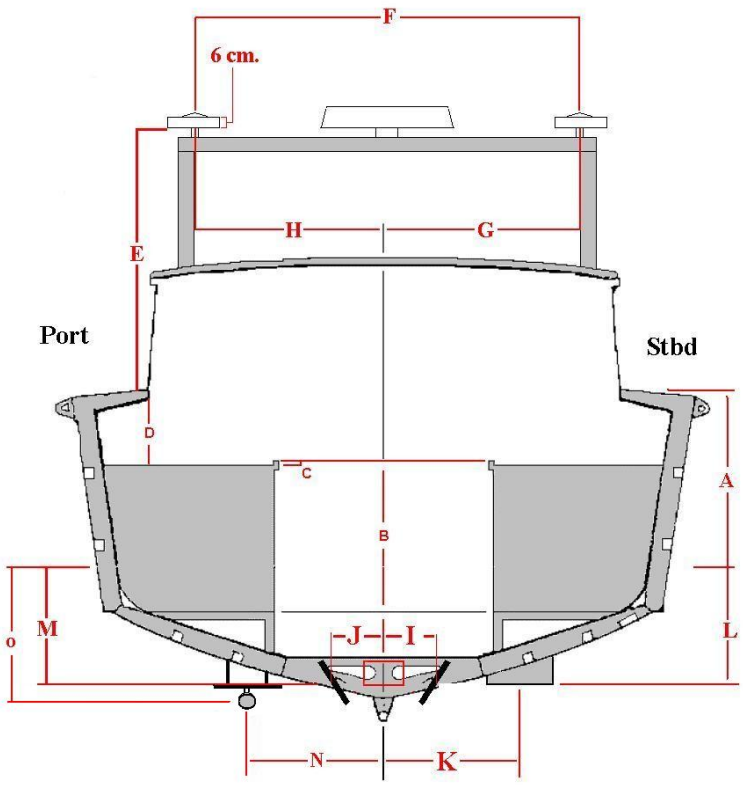

		cm.	date measured
Waterline to deck	A	100.5	May-00
MRU to counter top rail	B	103.6	May-00
Countertop rail	C	0.0	May-00
Countertop to deck	D	21.4	May-00
Deck to bottom of GPS	E	175.6	May-00
GPS to GPS	F	170.3	May-00
Centerline to Stbd GPS	G	85.8	May-00
Centerline to Port GPS	H	84.5	May-00
Centerline to Stbd SWMB ducer	I	33.8	May-00
Centerline to Port SWMB ducer	J	34.4	May-00
Centerline to VBES transducer	K	51.8	May-00
Waterline to VBES transducer	L	42.0	May-00
Waterline to SWMB transducer	M	46.2	May-00
Centerline to Klein SSS	N	38.0	Mar-02
Waterline to Klein	O	80.5	Mar-02

CARIS Vessel Configuration File (VCF) Parameters: RA-6

Vessel Configuration RA –6 SeaBeam/Elac 1180 - Two Transducers (63 Beams Each)

	Time Error	Delta X	Delta Y	Delta Z	Roll	Pitch	Azimuth	Draft
Port Transducer	0.00	-0.35	2.04	0.46	0.50	-1.60	-3.00	0.00
Stbd. Transducer	0.00	0.35	2.04	0.46	--1.10	-1.33	4.00	0.00

	Time Error	Delta X	Delta Y	Delta Z	Error
Navigation	-2.00	0.00	0.47	0.25	
Gyro	0.00	0.00	0.47	0.25	0.00
Heave	0.00	0.00	0.47	0.25	0.10
Pitch	0.00	0.00	0.47	0.25	0.00
Roll	0.00	0.00	0.47	0.25	0.25
SSS	0.00	-0.38	0.47	0.81	0.00

Dynamic Draft

Speed	0.0	4.0	5.4	6.0	6.6	7.1	8.4	8.8	9.4	10.1
Draft	0.00	0.00	0.01	0.03	0.03	0.05	0.07	0.07	0.07	0.04

SVP Entries Port Transducer

	X	Y	Z
Pole Top	-0.34	2.04	0.46
Pole Bottom	-0.34	2.04	0.46
	Pitch	**Roll**	**Azimuth**
Offsets	0.00	38.00	0.00

SVP Entries Stbd Transducer

	X	Y	Z
Pole Top	0.34	2.04	0.46
Pole Bottom	0.34	2.04	0.46
	Pitch	**Roll**	**Azimuth**
Offsets	0.00	-38.00	0.00

RA-7 (hull 817) Vessel Offset Measurements

Description: Aluminum SeaArk survey skiff
LOA: feet
Weight: tons

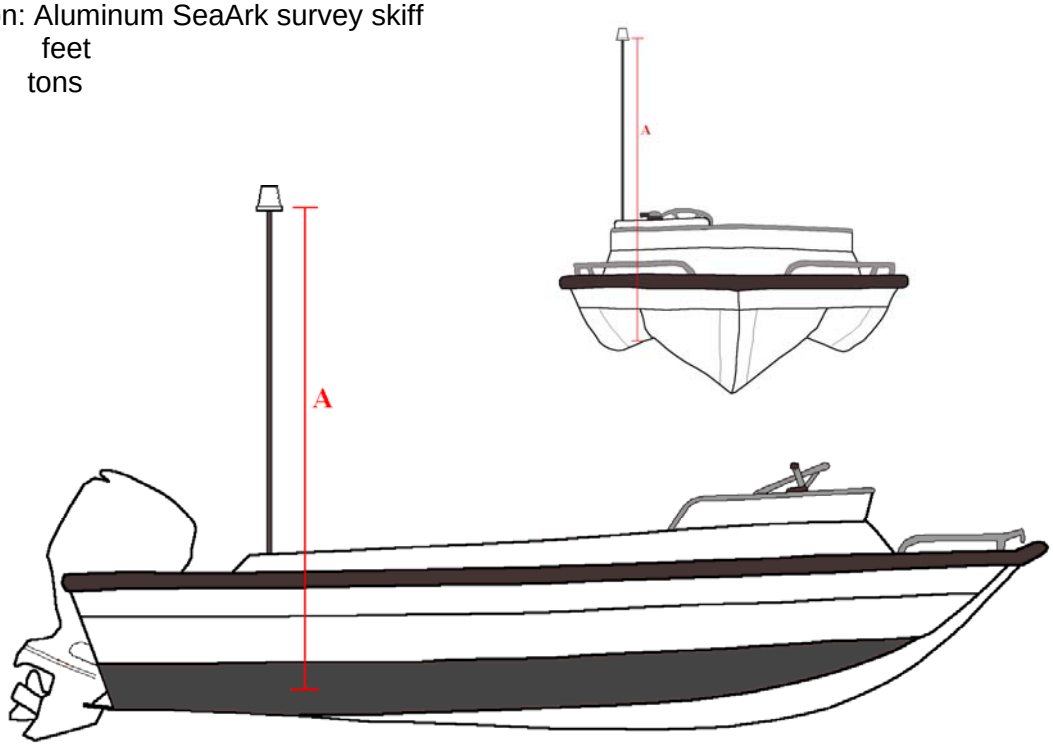

CARIS Vessel Configuration File (VCF) Parameters: RA-7

Vessel Configuration RA –7 No Echosounder

		cm	Date measured
RP to GPS	A	247	May-00

SVP Entries

	X	Y	Z
Pole Top	0	0	0
Pole Bottom	0	0	0
	Pitch	**Roll**	**Azimuth**
Offsets	0.00	0	0.00

RAINIER (S-221) Vessel Offset Measurements

Description: Steel Hydrographic Survey Ship
LOA: 231 feet
Weight: 1591 Tons

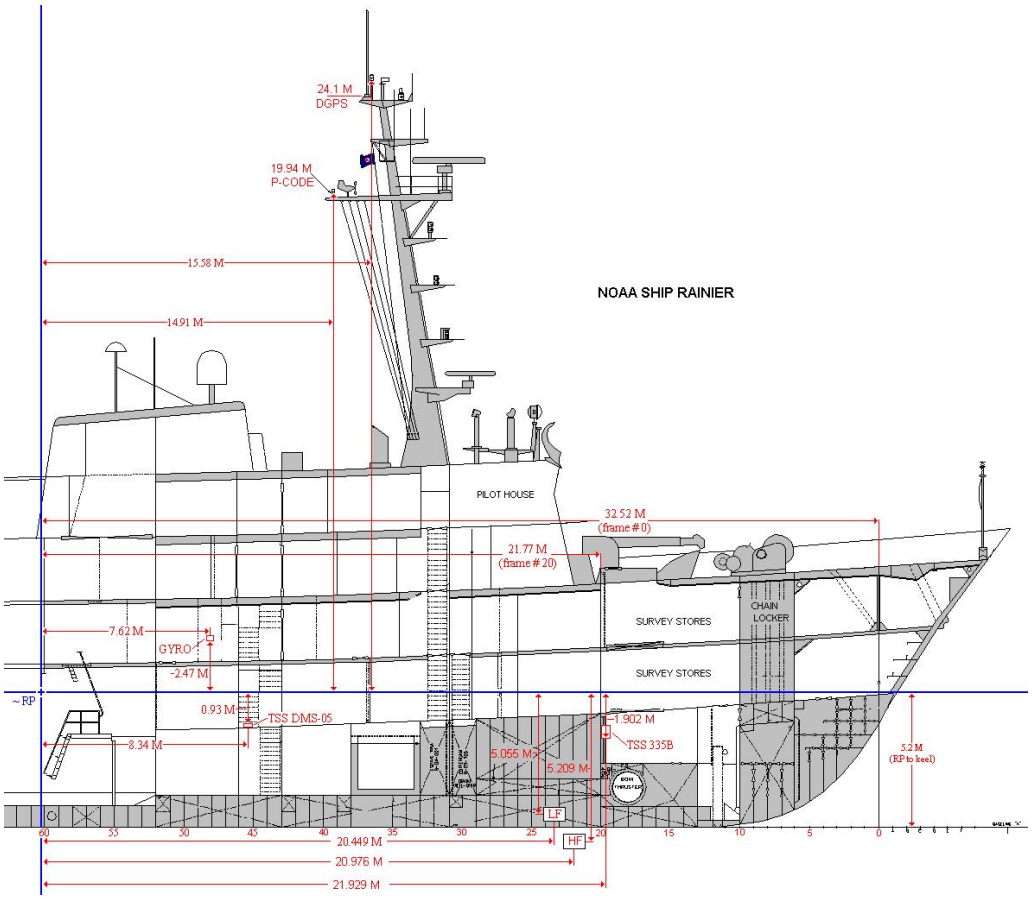

	meters			date
	X	Y	Z	measured
RP to GPS	-0.30	15.58	-24.10	May-00
RP to MRU	-1.90	8.34	0.93	May-00
RP to Port HF ducer	-0.58	20.98	5.21	May-00
RP to Stbd HF ducer	0.58	20.98	5.21	May-00
RP to Port LF ducer	-0.77	20.50	5.20	May-00
RP to Stbd LF ducer	0.77	20.50	5.20	May-00
RP to Gyro	-1.77	7.62	-2.47	May-00

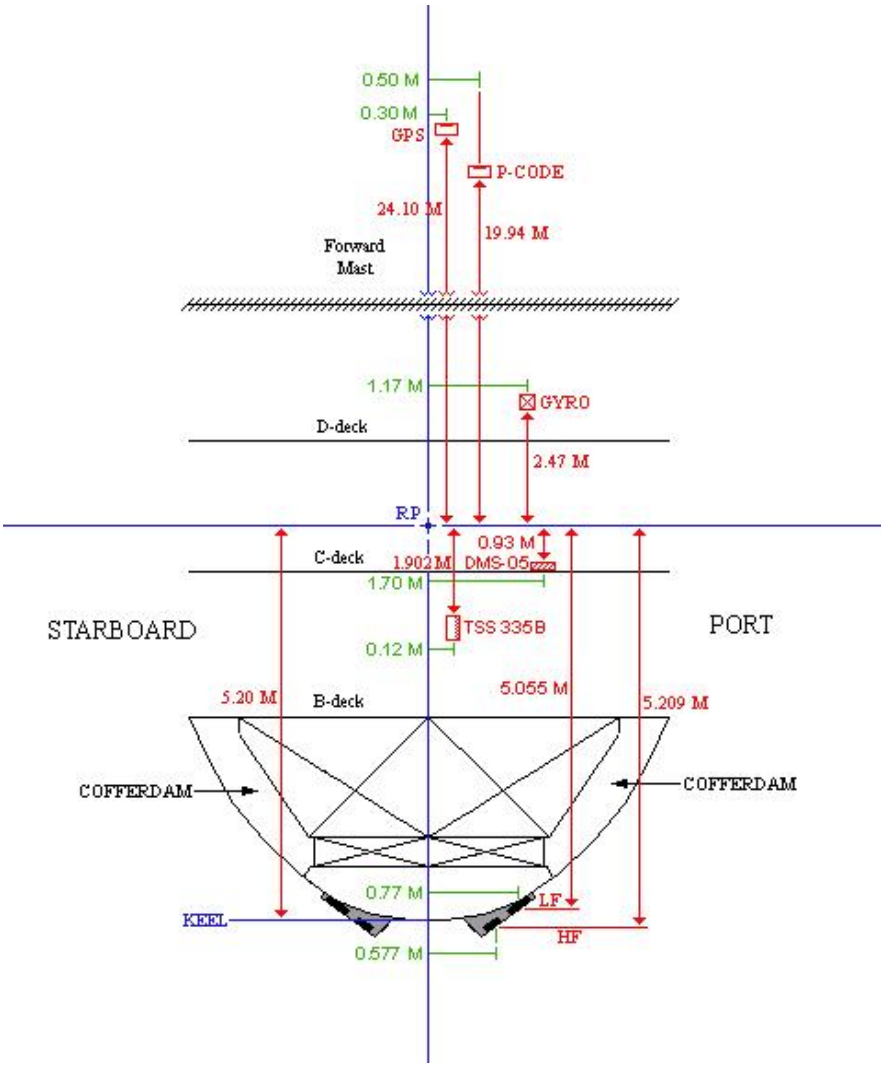
0.50 M
0.30 M
GPS
P-CODE
24.10 M
19.94 M
Forward
Mast
1.17 M
GYRO
D-deck
2.47 M
RP
0.93 M
C-deck
1.902 M
DMS-05
1.70 M
STARBOARD
TSS 335B
PORT
0.12 M
5.20 M
B-deck
5.055 M
5.209 M
COFFERDAM
COFFERDAM
0.77 M
LF
KEEL
HF
0.577 M

CARIS Vessel Configuration File (VCF) Parameters: S-221

Vessel Configuration RAINIER SeaBeam/Elac 1180 (HF) - Two Transducers (63 Beams Each)

	Time Error	Delta X	Delta Y	Delta Z	Roll	Pitch	Azimuth	Draft
Port HF Transducer	0.00	-0.58	20.98	5.21	-0.70	0.10	2.20	1.1
Stbd HF Transducer	0.00	0.58	20.98	5.21	-1.08	3.25	-3.30	1.1

	Time Error	Delta X	Delta Y	Delta Z	Error
Navigation	-2.10	-0.30	15.58	-24.10	
Gyro	0.00	-1.77	7.62	-2.47	0.00
Heave	0.00	-1.90	8.34	0.93	0.00
Pitch	0.00	-1.90	8.34	0.93	0.00
Roll	0.00	-1.90	8.34	0.93	0.00

Dynamic Draft

Speed	3.0	4.0	6.0	7.0	9.0	10.0	11.5	12.8	14.0	20.0
Draft	0.00	0.10	0.20	0.30	0.30	0.40	0.40	0.40	0.40	0.40

SVP Entries Port Transducer

	X	Y	Z
Pole Top	-0.58	20.98	5.21
Pole Bottom	-0.58	20.98	5.21
	Pitch	**Roll**	**Azimuth**
Offsets	0.00	38.00	0.00

SVP Entries Stbd Transducer

	X	Y	Z
Pole Top	0.58	20.98	5.21
Pole Bottom	0.58	20.98	5.21
	Pitch	**Roll**	**Azimuth**
Offsets	0.00	-38.00	0.00

Vessel Configuration RAINIER SeaBeam/Elac 1050 (LF) - Two Transducers (63 Beams Each)

	Time Error	Delta X	Delta Y	Delta Z	Roll	Pitch	Azimuth	Draft
Port LF Transducer	0.00	-0.77	7.62	5.20	0.77	3.70	0.50	1.11
Stbd LF Transducer	0.00	0.77	7.62	5.20	-0.45	2.95	-3.40	1.11

	Time Error	Delta X	Delta Y	Delta Z	Error
Navigation	-2.00	-0.30	15.58	-24.10	
Gyro	0.00	-1.77	7.62	-2.47	0.00
Heave	0.00	-1.90	8.34	0.93	0.00
Pitch	0.00	-1.90	8.34	0.93	0.00
Roll	0.00	-1.90	8.34	0.93	0.00

Dynamic Draft

Speed	3.0	4.0	6.0	7.0	9.0	10.0	11.5	12.8	14.0	20.0
Draft	0.00	0.10	0.20	0.30	0.30	0.40	0.40	0.40	0.40	0.40

SVP Entries Port Transducer

	X	Y	Z
Pole Top	-0.77	7.62	5.20
Pole Bottom	-0.77	7.62	5.20
	Pitch	**Roll**	**Azimuth**
Offsets	0.00	38.00	0.00

SVP Entries Stbd Transducer

	X	Y	Z
Pole Top	0.77	7.62	5.20
Pole Bottom	0.77	7.62	5.20
	Pitch	**Roll**	**Azimuth**
Offsets	0.00	-38.00	0.00

Appendix IV

Calibration Reports

- **Sound Velocity Profiler**
- **Diver Least Depth Gauge**
- **Lead Line**